ROHDE&SCHWARZ

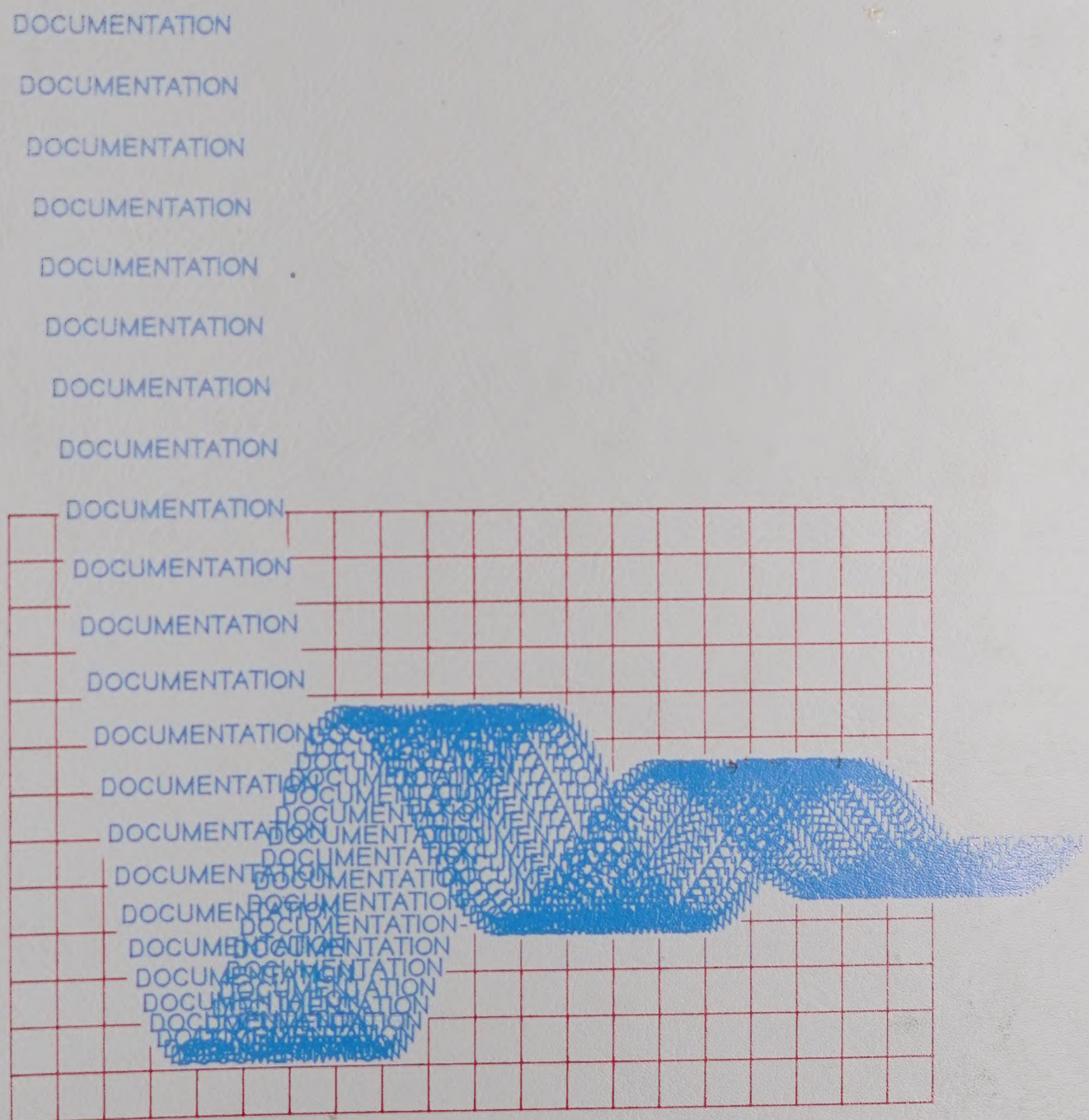

MP MASTER
MA22462

Servicehandbuch
Service Manual
1007.6700.24 - 03 -

SPECTRUM ANALYZER DISPLAY

804.8110.52

1

ROHDE&SCHWARZ

Measuring Instruments
and Systems Division

Service Manual

SPECTRUM ANALYZER DISPLAY

804.8110.52

VOLUME 1

Service manual consists of 2 volumes

Printed in the Federal
Republic of Germany

Contents of Service Manual SPECTRUM ANALYZER DISPLAY

VOLUME 1

5 Service Instructions Display Unit

6 Service Instructions for Modules of Display Unit

	Order No.	Index
IF Filter 1	805.5337.02	1
IF Filter 2	805.4318.02	2
Step Gain	805.3311.02	3
Lin/Log	805.2315.02	4
A/D Converter	805.1319.02	5

VOLUME 2

6 Service Instructions for Modules of Display Unit

IF Counter	806.0016.02	1
AF Unit	809.8518.02	2
Graphics	805.0712.02	3
Video Board	805.7817.02	4
Monitor	805.7317.02	5
Main Processor	810.2010.02	6
I/O Board	805.0812.02	7
Keyboard	805.6310.02	8
Power Supply, A21	805.8513.02	9
Power Supply, A22	805.8813.02	10

Contents

		Page
5	**Service Instructions Display Unit**	5.1
5.1	**Function Description**	5.1
5.1.1	General Function	5.1
5.1.2	Detailed Function	5.1
5.2	**Mechanical Design**	5.2
5.2.1	Opening the Instrument	5.2
5.2.2	Removing the Front Panel	5.2
5.2.3	Dismounting the Front Panel	5.2
5.2.4	Removing the CRT	5.3
5.2.5	Removing the Power Supply Assembly	5.3
5.2.6	Removing and Refitting of Modules	5.3
5.3	**Testing and Adjustment**	5.4
5.3.1	List of Modules	5.4
5.3.2	Summary of Important Adjusting Elements	5.5
5.3.3	Assembly and Module Tests	5.8
5.3.3.1	Power Supply Assembly A2	5.8
5.3.3.1.1	Checking the Voltages from Power Supply A21	5.8
5.3.3.1.2	Checking the Voltages from Power Supply A22	5.8
5.3.3.2	Monitor Assembly A5	5.8
5.3.3.2.1	Monitor A51	5.8
5.3.3.2.2	Video Board A52	5.10
5.3.3.2.3	Monitor Tube V530	5.10
5.3.3.3	Processing Assembly A4	5.10
5.3.3.3.1	Graphics A43	5.10
5.3.3.3.2	Main Processor A41	5.10
5.3.3.3.3	I/O Board A45	5.11
5.3.3.4	IF Assembly A3	5.11
5.3.3.4.1	A/D Converter A37	5.11
5.3.3.4.2	AF Unit A36	5.11
5.3.3.4.3	IF Counter A35	5.11
5.3.3.4.4	Lin/Log A34	5.11
5.3.3.4.5	Step Gain A33	5.13
5.3.3.4.6	IF Filter 2 A32	5.15
5.3.3.4.7	IF Filter 1 A31	5.16
5.3.3.5	Basic Assembly A1	5.19
5.3.3.5.1	Front Panel A11	5.19
5.3.3.5.2	Motherboard A12	5.19
5.3.3.5.3	Rear Panel A13	5.19
5.3.4	Final Adjustments	5.19
5.3.5	Summary of Adjustments on Display Unit Required When Replacing a Module	5.20

Digitized by the Internet Archive
in 2025

https://archive.org/details/manualsplus_11449

5.4	**Troubleshooting**	5.21
5.4.1	Selftest	5.21
5.4.2	List of Service Routines	5.21
5.4.3	Typical Faults	5.22
5.5	**Required Measuring Equipment and Accessories**	5.24

List of mechanical parts
Figs. to list of mechanical parts

Parts lists
Circuit diagrams
Component location plans

6 Service Instructions for Modules of Display Unit

Index

IF Filter 1 1
IF Filter 2 2
Step Gain 3
Lin/Log 4
A/D Converter 5

5 Service Instructions Display Unit

(See circuit diagram 804.8110 S)

5.1 Function Description

5.1.1 General Function

The display unit is a selective level indicator with a centre frequency of 21.4 MHz. The maximum level range which can be displayed is 100 dB, the minimum range 1 dB. The range of selection bandwidths extends from typically 6 Hz to 3 MHz and can be adjusted in small steps (~5%) over almost the complete range.

The display unit is not a stand-alone instrument. This means that it only functions together with the associated RF unit.

The display unit contains two filter modules of which the first is responsible for generating the selection bandwidths in the range from 1 kHz to 3 MHz and the second for the bandwidths <1 kHz. A broadband IF amplifier with a gain adjustable over a wide range drives a linear or logarithmic amplifier whose output signal is A/D converted and provides the amplitude information on the screen.

The instrument contains an AM/FM demodulator with AF amplifier as standard so that all input signals can be demodulated and monitored. The IF counter which is also included as standard enables the exact frequency of the signals to be determined in the range 21.4 ±5 MHz. The counter has an adjustable resolution and is of sensitivity such that signals with an S/N ratio greater than 20 dB can be counted unimpaired.

The complete instrument (display unit + RF unit) is controlled by the main processor module via the respective motherboard and the rear panel cabling (analyzer bus).

The I/O board establishes the connections to the external interfaces.

The information to be displayed on the internal monitor as well as on an external (colour) monitor is generated by the graphics module.

The monitor module handles horizontal and vertical control of the display tube. The video signal is generated by the graphics module and adjusted to the required level by the video board module.

The instrument contains its own power supply which only functions together with the RF unit.

5.1.2 Detailed Function

The IF signal provided by the associated RF unit is applied to module A31 (IF filter 1) via the connector X132 on the rear panel and the coaxial connector K1. After passing through two selection stages with electronically controlled bandwidths, the selected IF signal is applied to module A32 (IF filter 2). The signal is amplified by approx. 5 dB if the resolution bandwidth set on the instrument is larger than 1 kHz and is applied to module A33 (step gain). If the bandwidth is smaller than 1 kHz, the 21.4-MHz IF signal is mixed down to a frequency of 4.194 MHz and passed through five selection stages of largely identical design with electronically adjustable bandwidths. The IF signal is subsequently exactly mixed with the same oscillator frequency with which it was mixed down to produce the intermediate frequency of 21.4 MHz again. The gain of the following amplifier A33 (step gain) in the signal path can be adjusted in a range from 0 to 80 dB via the processor system. One output of A33 feeds a three-element selection filter on A31. A further output supplies the selected signal to the rear panel (X12 (IF OUT)). The assignment of bandwidths of A32 to A31 is shown in Table 4-1 in the service manual for the complete instrument. The selected signal from A31 is applied to the module A34 (Lin/Log). This operates either as a linear amplifier which is switchable between 0 and 40 dB or as a logarithmic amplifier with a log range of > 100 dB. The outputs of this module are connected to A35 (IF counter), whose frequency resolution can be adjusted by the processor system and whose gate time is derived from the 10-MHz reference frequency, and also to A36 (AF unit), whose demodulators can be switched over from AM to FM. The last output (X3) supplies the rectified video signal to A37 (A/D converter). The display range (between 1 and 110 dB), like the video bandwidth (between 1 Hz and 3 MHz) and the detectors can be selected in this module via the processor system. Following A/D conversion, the digitized signal is connected to A43 (graphics) via

A41 (main processor) and is displayed on the screen (V530) via A52 (video board) and A51 (monitor). An external (colour monitor) can be connected to connector X142 on the motherboard.

The module A45 (I/O board) handles data transfer between the instrument and external peripherals such as printer, plotter, floppy disk drive or alphanumeric keyboard.

The power supply (module A2) for the display unit consists of two similar PCBs (A21, A22), a blower and the associated AC transformer.

The function of the modules is described in detail in the corresponding module description.

5.2 Mechanical Design

(See exploded views in Appendix, Figs. 5-10 to 5-12)

The display unit is constructed in design 90. The housing has a height of 5 standard units. Handles are located on the left and right. Two additional handles can also be fitted on the left and right of the front panel.

The instrument comprises an internal frame (with motherboard) made up of the front and rear panel frames and corresponding rails.

The pannelling comprises two side covers and the top and bottom covers. An additional cover plate is fitted underneath the top cover to increase rigidity across the instrument.

The instrument has been designed for easy servicing. The modules are easy to replace, the power pack assembly can be removed to the rear, the front panel and the colour CRT to the front.

Before carrying out adjustments on the display unit, this must be isolated from the associated RF unit by loosening the two knurled screws and disconnecting the cables.

5.2.1 Opening the Instrument

(See Fig. 5-10)

- Remove the left and right rear-panel feet (11, 12) (4 screws in all).
- Push top and bottom covers (1, 2) to the rear and remove.
- Unscrew the inner cover plate (71).

Reassemble in the reverse order.

5.2.2 Removing the Front Panel

(See Fig. 5-10)

The front panel an be removed as follows with the instrument closed:

- Remove the strips for the grooves (14).
- Loosen 3 screws each on the top and bottom of the housing in the groove.
- Remove the front panel.

5.2.3 Dismounting the Front Panel

(See Fig. 5-10)

- The cover frame (60) of the CRT can be removed to the front after carefully bending back the plastic clamps on the rear of the front panel.
- The mounting plate (40) and the front panel (64) can be separated after loosening three varnished countersunk screws.
- After loosening the screws at the rear of the keyboard PCB (45), the latter can be removed from the mounting plate.

Reassemble in the reverse order.

5.2.4 Removing the CRT

(See Fig. 5-10)

Caution: When removing the CRT (20), observe regulations for handling evacuated CRTs.

Place the CRT either horizontally or vertically with the screen on a soft cloth. Scratches on the tube surface must be avoided.

The CRT can be removed once the front panel has been removed:

- Pull off connector of the deflection unit from the monitor (A51).
- Loosen the screws of the support (21) for the tube.
- Carefully pull the tube forwards by approx. 10 cm.
- Remove the socket board (24) and high-voltage cable.
- The CRT with the support can be removed to the front.
- The CRT is completely free after unhooking the ground cable on the outside and loosening the four fixing screws (32).

Refit in the reverse order.

5.2.5 Removing the Power Supply Assembly

(See Fig. 5-11)

Caution: Disconnect the AC power supply cable before removing the power pack.

- Loosen the 5 screws (216) on the perforated part of the rear panel (215) of the power pack and the 4 screws (174) on the transformer housing (170).
- Pull out the power pack by approx. 10 cm.
- Disconnect the cable between the power pack assembly and the motherboard.

The power transformer and the blower are now accessible.

Refit in the reverse order.

5.2.6 Removing and Refitting of Modules

(See Fig. 5-11)

Before removing a module, ensure that all cables (including non-coaxial) are disconnected. Never use force when removing a module.

When refitting a module, ensure that the coaxial connections are not interchanged. The inscription on the internal cover provides information for servicing.

5.3 Testing and Adjustment

5.3.1 List of Modules

Unit/ Comp. No.	Module	Stock No.	Colour code
A1	Basic assembly		–
A11	Front panel	804.9916	–
A12	Motherboard	806.0516	–
A13	Rear panel	805.9510	–
A15	Sub-motherboard	806.0916	–
A111	Keyboard	805.6310	–
A2	Power supply assembly	805.8013	–
A21	Power supply	805.8113	–
A22	Power supply	805.8813	–
A3	IF assembly		–
A31	IF filter 1	805.5337	–
A32	IF filter 2	805.4318	–
A33	Step gain	805.3311	–
A34	Lin/Log	805.2315	–
A35	IF counter	806.0016	–
A36	AF unit	809.8518	–
A37	A/D converter	805.1319	yellow
A4	Processing assembly		–
A41	Main processor	810.2010	blue
A43	Graphics	805.0712	red
A45	I/O board	805.0812	grey
A5	Monitor assembly		–
A51	Monitor	807.7317	–
A52	Video board	805.7817	blue
A53	Socket board	805.7017	–
V530	Monitor tube	805.8007	–

5.3.2 Summary of Important Adjusting Elements

Identity code	Module	Adjustment	Element	Section
A2 A21	Power supply assembly			5.3.3.1
	Power supply	supply voltages + 5 V/ + 5 V/ + 5 V*/ + 85 V	R63	5.3.3.1.1
A22	Power supply	supply voltages + 15 V/-15 V/ + 12 V/-5 V/-15.6 V	R23	5.3.3.1.2
A3 A31	IF assembly IF filter 1	filter adjustment (21.4 MHz) for:		5.3.3.4 5.3.3.4.6
		bandwidth 30 kHz	R306	
		symmetry	C14 C47 C109 C138 C187	
		centre frequency	C18 C28 C51 C60 C112 C121 C142 C149 C191 C198	
		gain	R41 R93 R94 R132 R164 R174 R257 R264 C24 C55 C117 C146 C212	

Identity code	Module	Adjustment	Element	Section
A32	IF filter 2	21.4-MHz crystal filter for ripple, centre frequency and amplitude. Amplitude 34.4-MHz oscillator	C211 C229 C232	5.3.3.4.6
		filter adjustment (4.194 MHz) for:		
		bandwidth 1 kHz	R278	
		symmetry	C45 C68 C98 C128 C158	
		centre frequency	C42 C48 C70 C74 C101 C105 C131 C135 C161 C165	
		gain	R34 R65 R95 R125 R155	
		gain uniformity *RBW >< 1 kHz*	R190	
A33	Step gain	10 dB 8 dB 4 dB 2 dB 1 dB 40 dB 20 dB Total gain Total gain	R27 R253 R256 R259 R262 R329 R360 R109 R155	5.3.3.4.5

Identity code	Module	Adjustment	Element	Section
A34	Lin/Log	filter frequency	C115	5.3.3.4.4
		filter amplitude	R124	
		log full-scale value	R701	
		log offset	R283	
		lin full-scale value	R703	
		lin offset	R406	
		lin 10 dB	R366	
		lin 20 dB	R336	
		lin 40 dB	R357	
A36	AF unit	VCO steepness	C140	5.3.3.4.2
		VCO centre frequency	L137	
		FM deviation	R131	
		AM modulation	C75	
		AM reference	R57	
		DC offset	R180	
A37	A/D converter	clock frequency	R399	5.3.3.4.1
		reference level	R57	
		video offset	R123	
		video gain	R125	
		sample + hold offset	R207	
		scale	R244	
		max. peak det. offset	R143	
		min. peak det. offset	R175	
A4	Processing assembly			5.3.3.3
A41	Main processor	oscillator frequency of clock	C91	5.3.3.3.2
A45	I/O board	wait logic timing	R5	5.3.3.3.3
		write precompensation	R30	
		output pulse width	R28	
		output pulse width	R29	
		VCO frequency	R39	
A5	Monitor assembly			5.3.3.2
A51	Monitor	intensity	R91	5.3.3.2.1
		focus	R81	
		horizontal hold	R21	
		vertical hold	R156	
		vertical position	R181	
		vertical amplitude	R167	
		vertical linearity	R159	
		horizontal amplitude	R186	
		horizontal linearity	L40	
		horizontal position	R6	
		parabolic equalization	R183	
		trapezoidal equalization	R171	
A52	Video board	green offset	R46	5.3.3.2.2
		red gain	R26	
		red offset	R32	
		blue gain	R6	
		blue offset	R12	

5.3.3 Assembly and Module Tests

Level diagram/coaxial connections
(shown in circuit diagram 804.8110 S)

Modules - motherboard connections
(shown in circuit diagram 804.8110 S)

Motherboard connections
(shown in circuit diagram 806.0516 S)

After opening the housing, it is recommendable to place the display unit upright on its side for servicing.

It is recommendable to use the Service Kit FZ-1 (811.0010.02) and the Service Cable Set FZ-2 (811.0304.02).

The RF unit must always be used during servicing as important settings which depend on the connections inside the instrument could not otherwise be carried out.

Check that the AC supply is set to the correct value.

5.3.3.1 Power Supply Assembly A2
(See circuit diagram 805.8013 S)

After switching on both units at the rear panels and then on the front panel, carry out the following visual checks:

- LEDs light up on rear panels.
- LEDs light up on power supply assembly.
- Blower in rear panel rotates.
- Blower in power supply assembly rotates.

5.3.3.1.1 Checking the Voltages from Power Supply A21

Connector	Pin	Voltage	Tolerance
X221	1	+ 5 V	2 %
X221	2	+ 5 V *	2 %
X221	3	+ 85 V	1 %
X212	17	+ 5 V	2 %

* Adjust using R63

5.3.3.1.2 Checking the Voltages from Power Supply A22

Connector	Pin	Voltage	Tolerance
X221	7	+ 15 V *	1 %
X221	9	-15 V	2 %
X222	12	-5 V	4 %
X222	14	+ 12 V	4 %
X222	17	-15.6 V	5 %

* Adjust using R23

5.3.3.2 Monitor Assembly (A5)
(Refer to monitor - motherboard connections, shown in circuit diagram 804.8110 S)

5.3.3.2.1 Monitor (A51)

The graticule of the FSA serves as a test pattern for the following adjustments:

- After adjusting the minimum possible intensity using the rotary knob on the front panel, adjust R91 such that the test pattern is just still visible.
- Adjust the intensity to a normal value (this corresponds to approx. 75% of bar full-scale) using the rotary knob. The control voltage at X32 pin 5 is approx. 7.5 V.
- Adjust the focus using R81.
- Adjust the horizontal frequency using R21.
- Adjust the vertical frequency using R156.

The display size should be set according to the following pattern:

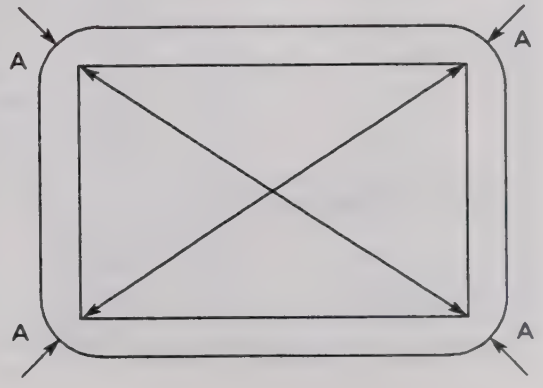

The distance between the frame and the display should be approx. 1 to 2 mm at all corners.

- Adjust the vertical position using R181.
- Adjust the vertical amplitude using R167.
- Adjust the vertical linearity using R159.
- Adjust the horizontal amplitude using R186.
- Adjust the horizontal linearity using L40.
- Adjust the centre of the display using the horizontal phase R6.
- Fine correction of graticule distortion : parabolic R183, trapezoidal: R171

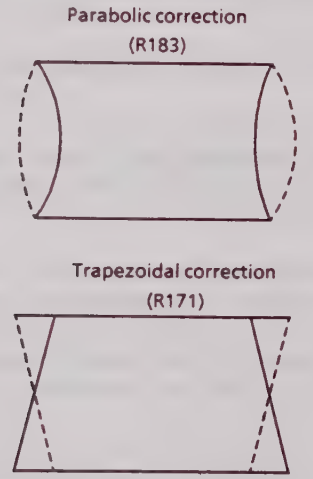

Permissible distortions:
The following information applies at a moderate intensity (approx. 0.75 times the maximum value). The test pattern should be just visible at minimum intensity. If the intensity is too high, additional distortion of the picture may occur (e.g. wide white bar across picture) as a result of beam current limitation).

- Geometric error ≤ 3% (vertical 4.5 mm, horizontal 3.5 mm)
- Colour convergence error < 0.6 mm (vertical and horizontal) within circle; < 1 mm outside circle. The centre point of each colour line is its brightest range.

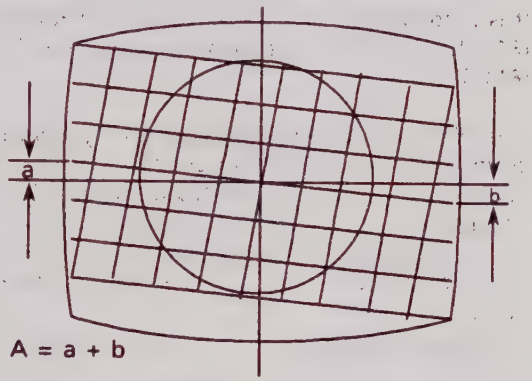

- Slanting graticule A ≤ 2 mm (a + b)
- Thermal drift of picture size 3.5 % (vertical 5.25 mm, horizontal 4 mm)

Position of monitor controls

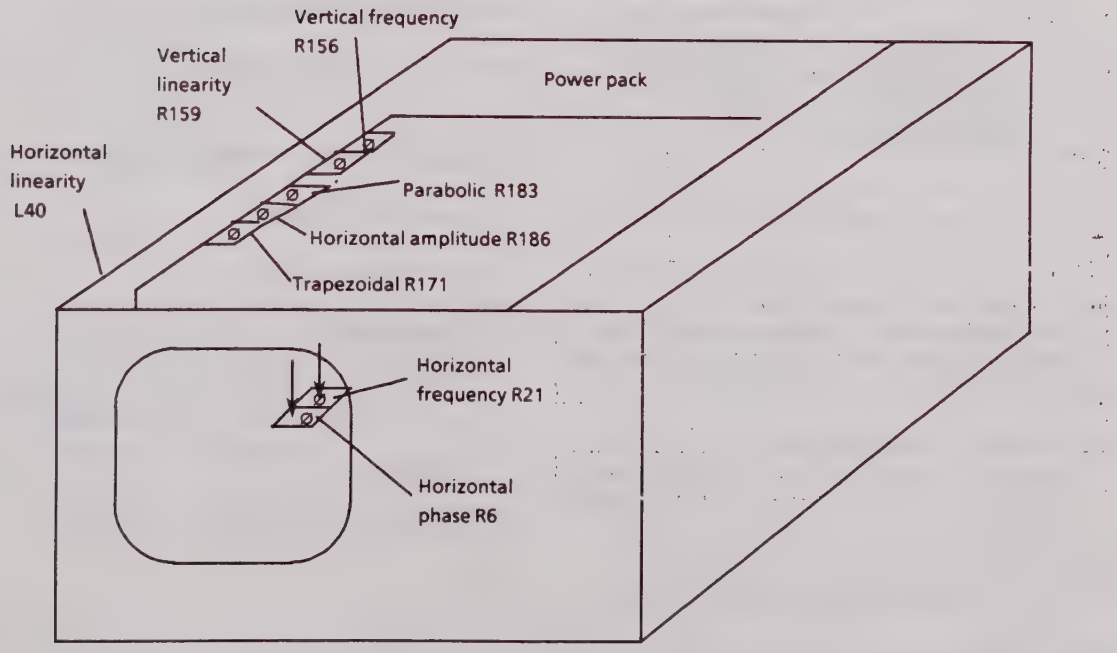

5.3.3.2.2 Video Board (A52)

1. Equipment required

- 100-MHz oscilloscope
- 10:1 divider
- Digital voltmeter (DVM)

2. Preparation

- Switch off instrument.
- Disconnect ground cable from X35, pull out module slightly, disconnect cables from X40, X41 and X42, pull out module completely and plug onto extender card (811.0256).

3. Check the supply voltages
(measure using DVM)

- P 70: +3.3 to +3.6 V
- Anode V75: +8.4 to +9 V

4. Adjust amplifier

- Press PRESET and enter service function 2.43.03.

a) Connect oscilloscope to X41.
Setting (10 V/div; 5 µs/div.). Measure using 10:1 divider and adjust using R46.

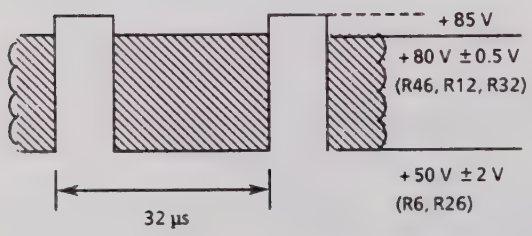

b) Connect oscilloscope to X42.
Adjust to +80 V ±0.5 V using R12 and adjust to same value as in point a) using R6 (+50 V).

c) Connect oscilloscope to X4.
Adjust to +80 V ±0.5 V using R32 and to the same value as in point a) using R26 (+50 V).

d) Switch off instrument and insert module.

e) Switch on instrument, enter service function 2.43.03 and adjust intensity such that the last step in the grey scale remains black.

f) If necessary, adjust dark steps of the grey scale to monochrome grey using R12 and R32.
Do not readjust R46.

g) Adjust white squares on monochrome white using R6 and R26.

h) Repeat points f) and g) if necessary.

5.3.3.2.3 Monitor Tube (V530)

The monitor tube has been factory-set to the best colour convergence. If colour convergence problems occur, check whether the demagnetization circuit operates.

Do not manipulate the controls on the monitor tube. This would invalidate the manufacturer's guarantee. Ensure that no excessively high magnetic fields (DC or AC) occur in the vicinity of the monitor tube during operation.

5.3.3.3 Processing Assembly (A4)

Hardly any adjustments are necessary in the processing assembly A4 because of the largely digital circuitry.

5.3.3.3.1 Graphics (A43)

No adjustments are necessary.

5.3.3.3.2 Main Processor (A41)

1. Equipment required

- Frequency counter

2. Preparation

- Connect high-impedance counter input to X3 (pin 1: signal, pin 2: ground).

3. Adjustment

- Adjust to 32.768 ±3 Hz using C91.

5.3.3.3.3 I/O Board (A45)

1. *Equipment and accessories required*

- Floppy disk drive
- Keyboard
- Program floppy

2. *Preparation*

- Connect drive to display unit
- Read in program floppy via keyboard command

3. *Adjustment*

- Wait logic, floppy disk controller (see module description "I/O board")

5.3.3.4 IF Assembly (A3)

The IF assembly is adjusted and tested starting with the last module and working backwards to the first module. The input/output levels between the modules for a particular setting are shown in the circuit diagram 804.8110 S.

5.3.3.4.1 A/D Converter (A37)

1. *Equipment required*

- Frequency counter
- Multimeter
- Oscilloscope
- Function generator
- Pulse generator
- DC voltage source

2. *Preparation*

- The module A37 can only be tested together with the main processor (A41), graphics (A43) and I/O board (A45).

3. *Testing and adjustment*

- See module description "A/D converter".

5.3.3.4.2 AF Unit (A36)

1. *Equipment required*

- Signal generator 21.4 MHz (AM/FM facility)
- Multimeter

2. *Preparation*

- Connect generator signal to X3.

3. *Testing and adjustment*

- See module description "AF unit".

5.3.3.4.3 IF Counter (A35)

1. *Equipment required*

- Signal generator 21.4 MHz

2. *Preparation*

- Connect generator signal to X5 and synchronize generator with 10-MHz reference of the instrument.

3. *Testing*

- Switch on function "Signal count"
- Examine with:
  gate times from 100 µs to 10 s,
  level range -19 dBm to -25 dBm,
  frequency range 11.4 MHz to 31.4 MHz,
  tolerance of counter result ± 1 LSB

5.3.3.4.4 Lin/Log (A34)

1. *Equipment required*

- Switchable precision attenuation set with known attenuation error E_{at}
  (steps 10/1 dB, max. attenuation 100 dB).

2. *Preparation*

- Connect 100-MHz calibration output to RF INPUT via the attenuation set and enter the following settings:
  PRESET,
  CF 100 MHz, REF.LEVEL –20 dBm, SPAN 1 kHz, RBW 300 Hz, VBW 30 Hz

3. *Testing the characteristics*

3.1 *Logarithmic amplifier*

a) Select LEVEL RANGE 110 dB

b) Switch attenuation set to 0-dB attenuation, switch on MKR, press MKR → PEAK, MKR → REF.LEV;
press MENU ⇒ and REF.FIXED.

c) Increase attenuation a_{at} in 10-dB steps, read Δ MKR level each time and calculate error according to following equation:
$F = \Delta MKR + a_{at} + F_{at}$ (1)
F must be smaller than ± 0.5 dB in the range 0 dB ≤ Δ MKR ≤ -100 dB.

d) Enter LEVEL RANGE 20 dB and carry out setting as in 3.1 b).

e) Increase attenuation a_{at} in 1-dB steps, read Δ MKR level each time and calculate error according to equation (1).
Δ F of two successive attenuation steps must be smaller than ± 0.1 dB.

3.2 *Linear rectifier*

a) Connect and set as in point 2.

b) Enter LEVEL RANGE LIN/dB and set as in 3.1 b).

c) Increase attenuation a_{at} from 0 to 40 dB in 10-dB steps, read Δ MKR level each time and calculate error according to equation (1). The error must be smaller than ± 0.2 dB.

3.3 *Linear amplifier*

a) Connect and set as in point 2.

b) Enter LEVEL RANGE LIN/dB and set attenuation set to 0 dB.

c) Press REF.LEV and adjust the display approx. 2 scale divisions below the ref. level using the spinwheel.

d) Switch on MKR, press MKR→PEAK, MENU⇒ and REF.FIXED.

e) Increase attenuation a_{at} in 10-dB steps and enter SF according to Table 5-1.

Table 5-1

Enter	Setting a_{at} of attenuation set
SF 2.34.01	0 dB
SF 2.34.02	10 dB
SF 2.34.03	20 dB
SF 2.34.04	30 dB
SF 2.34.05	40 dB

The permissible error for all functions is ± 0.1 dB + E_{at}

4. *Adjustment in instrument*

4.1 *Equipment and accessories required*

- Signal generator 21.4 MHz; -85 to + 15 dBm (e.g. SMK)
- Extender card (811.0040)
- Extension cable

4.2 *Precondition*

- Correctly adjusted A/D converter (A37)

4.3 *Preparation*

- Unscrew all SMC cables from the module, plug module onto extender card, connect cable W156 to A34/X3 via extension and signal generator to A34/X8. Apply 21.4 MHz/-45 dBm (see following test setup).

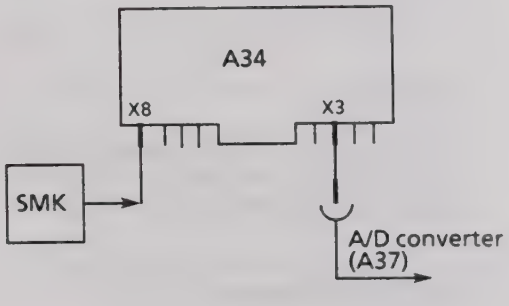

4.4 Adjust bandpass filter

a) Enter PRESET, REF.LEVEL -20 dBm, RBW 300 kHz and LEVEL RANGE 110 dB.

b) Switch on MKR, press MENU ⇒ and REF.FIXED.

c) Enter RBW 3 kHz and adjust to maximum display using C115.

d) Adjust to Δ MKR level 0 ±0.01 dB using R124.

4.5 Adjust log scale

a) Switch on MKR and set LEVEL RANGE to 110 dB.

b) Adjust signal generator level to +15 dBm and adjust to MKR level -20.0 dBm using R701.

c) Adjust signal generator level to -85 dBm and adjust to MKR level -120.0 dBm using R283.

d) Repeat steps b) and c) until both values are attained.

4.6 Adjust linear amplifier

a) Enter SF 2.34.01 and adjust signal generator level to +15 dBm.

b) Switch on MKR, press MENU ⇒ and REF.FIXED, adjust test generator level and SF according to Table 5-2.

Table 5-2

Entry	Signal generator level	Control
SF 2.34.02	+5 dBm	R366
SF 2.34.03	-5 dBm	R336
SF 2.34.05	-25 dBm	R357

Adjust in each case to Δ MKR level 0 ±0.01 dB

4.7 Adjust lin scaling

a) Enter SF 2.34.01.

b) Adjust signal generator level to +15 dBm, switch on MKR and adjust MKR level to -20 dBm ±0.01 dB using R703.

c) Adjust signal generator level to -25 dBm and adjust MKR level to -60 dBm ±0.02 dB using R406.

d) Repeat steps b) and c) until both values are attained.

5.3.3.4.5 Step Gain (A33)

1. Testing the operation

- Connect 100-MHz calibration output to RF INPUT via precision attenuation set (see following test setup).

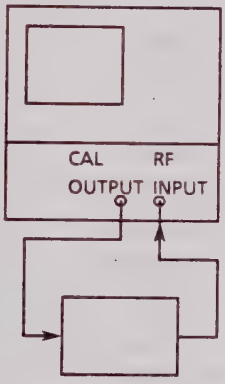

Attenuation set 0 to 70 dB
1-dB steps

Enter following settings:

PRESET
CF 100 MHz, SPAN 1 kHz, REF.LEV. -14 dBm, LIN, RBW 100 Hz, VBW 30 Hz, ATT 20 dB

4.2 Preparation

- Unscrew cable W153 from A32/X2 and cable W150 from A32/X8 and plug module onto extender card.
- Connect W153 to A32/X2 and W150 to A32/X8 via extension cable.

4.3 Adjust 21.4-MHz crystal filter

- Connect 100-MHz calibration output to RF INPUT and enter following settings: PRESET; CF 100 MHz; SPAN 100 kHz; REF. LEV. –18 dBm; LEVEL RANGE 50 dB; RBW 300 Hz.
- Plug in X34, X61, X91, X121 and X151 and adjust passband curve to mean, maximum, minimum ripple using C211 and C229.

4.4 Adjust 4.19-MHz filter

- Enter SPAN 5 kHz.
- Enter SF 2.32.01.5.
- Set R278 to centre position.
- Insert jumpers according to Table 5-8 and adjust filter.

Tabelle 5-8

Inserted jumpers	Adjustment
X151 X121 X91 X61	C48 to centre C45 to symmetry
X151 X121 X91 X34	C74 to centre C68 to symmetry
X151 X121 X61 X34	C105 to centre C98 to symmetry
X151 X91 X61 X34	C135 to centre C128 to symmetry
X121 X91 X61 X34	C165 to centre C158 to symmetry

- Remove all jumpers, switch on MKR, press MKR → PEAK, MENU ⇒ and enter N-dB DOWN 3 dB.
- Adjust R278 such that Δ MKR frequency displayed is 1 kHz ± 10 Hz.
- Press MKR → PEAK, MENU ⇒ and REF.FIXED.
- Enter SPAN 0 Hz, RBW 10 Hz.
- Press FREQUENCY and adjust display to maximum using spinwheel.
- Adjust display to maximum using C161, C131, C101, C70 and C42.
- Enter LEVEL RANGE 20 dB and adjust Δ MKR level to 0 ±0.05 dB using R34, R65, R95, R125 and R155 equally.
- Enter RBW 3 kHz and SPAN 5 kHz, switch on MKR, press MKR→PEAK, switch on MENU ⇒ and press REF.FIXED.
- Enter RBW 300 Hz, press ΔMKR→PEAK and adjust Δ MKR level to 0 ±0.05 dB using R190.
- Remove SMC extension cable and insert module again.

5.3.3.4.7 IF Filter 1 (A31)

1. Equipment required

- None

2. Preparation

- Connect 100-MHz calibration output to RF INPUT and enter following setting: PRESET; CF 100 MHz; SPAN 2 kHz; REF. LEV. -15 dBm; LEVEL RANGE 10 dB; RBW 1.1 kHz.
- Switch on MKR and press MKR → PEAK, press MENU ⇒ and REF.FIXED.

- Enter SPAN and RBW according to Table 5-9, press ΔMKR → PEAK each time and note Δ MKR level.

Table 5-9

RBW	SPAN	ΔMKR level
1.1 kHz	3 kHz	0.00 dB
3 kHz	10 kHz	...
10 kHz	30 kHz	...
30 kHz	100 kHz	...
100 kHz	300 kHz	...
300 kHz	1 MHz	...
1 MHz	3 MHz	...
3 MHz	10 MHz	...

The difference in level should be less than 1 dB.

- Enter SPAN 2 kHz, SF 2.31.01.127.
- Switch on MKR and press MKR→PEAK.
- Switch on MULTI MKR and enter N-dB DOWN 3 dB.
  The Δ MKR frequency now indicates the –3-dB bandwidth of the filter.
  This should be < 1 kHz.
- Enter SPAN 100 kHz, SF 2.31.01.0.
- As described above, measure -3-dB bandwidth.
  This should be > 30 kHz.
- Enter SPAN 200 kHz, SF 2.31.01.128.
- Measure -3-dB bandwidth.
  This should be < 80 kHz.
- Enter SPAN 10 MHz, SF 2.31.01.255.
- Measure -3-dB bandwidth.
  This should be ≥ 3 MHz.
- Enter SPAN and RBW according to Table 5-10, measure -3-dB bandwidth and note.

Table 5-10

SPAN	RBW	Measured -3-dB bandwidth
3 kHz	1.1 kHz	...
10 kHz	3 kHz	...
30 kHz	10 kHz	...
100 kHz	30 kHz	...
300 kHz	100 kHz	...
1 MHz	300 kHz	...
3 MHz	1 MHz	...
10 MHz	3 MHz	...

- Enter LEVEL RANGE 100 dB.
- Enter SPAN and RBW according to Table 5-11, measure -60-dB bandwidth and note.

Table 5-11

SPAN	RBW	Measured -60-dB bandwidth
30 kHz	1.1 kHz	...
100 kHz	3 kHz	...
300 kHz	10 kHz	...
1 MHz	30 kHz	...
3 MHz	100 kHz	...
10 MHz	300 kHz	...
30 MHz	1 MHz	...
30 MHz	3 MHz	...

- Calculate the shape factor (SF) for each bandwidth:

$$SF = \frac{-60 - dB\ bandwidth}{-3 - dB\ bandwidth}$$

SF should be < 12 for each bandwidth.

4. *Adjustment*

4.1 Equipment and accessories required

- 2 plug-in jumpers (on adapter card 811.0227)
- Extension cable SMC
- SMC connection assembly

4.2 Preparation

- Unscrew the handle and the handle recess on the right-hand side of the display unit.
- Connect 100-MHz calibration output to RF INPUT.

4.3 Adjust filters 1 and 2

- Adjust only with both covers fitted.
- Unscrew cable W154 from A31/X8 and connect to A31/X4 via extension.
- Enter following setting:
  PRESET; CF 100 MHz; SPAN 0.5 MHz; LEVEL RANGE 20 dB; REF. LEV. -30 dBm; RBW 30 kHz.
- Set R306 to centre position.
- Insert jumper according to Table 5-12 and adjust.

Table 5-12

Inserted jumper	Adjustment
X17	C51 to centre C47 to symmetry
X41	C18 to centre C14 to symmetry

- Remove jumper from X41, switch on MKR, press MKR → PEAK, MENU ⇒ and REF.FIXED.
- Enter SPAN 10 kHz and SF 2.31.01.127.
- Press ΔMKR → PEAK and adjust ΔMKR level to 0 ± 0.02 dB using R41.
- Enter SPAN 5 MHz and RBW 3 MHz.
- Insert jumper on X42.
- Press ΔMKR → PEAK and REF.FIXED twice.
- Enter RBW 80 kHz and SPAN 0.5 MHz.
- Set C28 to centre and adjust to minimum using C24.
- Press ΔMKR → PEAK and adjust ΔMKR level to 0 ± 0.02 dB using R257.
- Remove jumper from X42 and plug onto X19.
- Set C60 to centre and adjust to minimum using C55.
- Press ΔMKR → PEAK and adjust ΔMKR level to 0 ± 0.02 dB using R94.
- Remove jumper from X19.

4.4 Adjust filters 3 to 5

- Connect W154 directly to A31/X8 and W146 via extension to A33/X3.
- Set REF.LEVEL to -25 dBm.
- Enter SPAN 0.5 MHz and SF 2.31.01.5.
- Insert jumpers according to Table 5-13 and adjust.

Table 5-13

Inserted jumper	Adjustment
X132 X182	C112 to centre C109 to symmetry
X102 X182	C142 to centre C138 to symmetry
X102 X132	C191 to centre X187 to symmetry

- Remove jumpers from X102 and X132, press ΔMKR → PEAK and REF.FIXED twice.
- Enter SPAN 10 kHz and SF 2.31.1.127.
- Press ΔMKR → PEAK and adjust Δ MKR level to 0 ± 0.02 dB using R132.
- Enter SPAN 5 MHz and RBW 3 MHz.
- Insert jumpers on X131 and X181.
- Press ΔMKR → PEAK and REF.FIXED twice.
- Enter RBW 80 kHz and SPAN 0.5 MHz, set C121 to centre and adjust to minimum using C117.
- Press ΔMKR → PEAK and adjust Δ MKR level to 0 ± 0.02 dB using R164.
- Plug jumper from X131 to X101, set C149 to centre and adjust to minimum using C146.
- Press ΔMKR → PEAK and adjust Δ MKR level to 0 ± 0.02 dB using R174.
- Plug jumpers from X181 to X131, set C198 to centre and adjust to minimum using C212.
- Press ΔMKR → PEAK and adjust Δ MKR level to 0 ± 0.02 dB using R264.
- Remove jumpers from X101 and X131.

- Connect W146 to A31/X1, W150 to A31/X4 and W153 to A33/X3 again.
- Enter REF.LEV. -18 dBm, SPAN 50 kHz, SF 2.31.1.5.
- Switch on MKR and press MKR→PEAK.
- Switch on MENU ⇒ and enter N-dB DOWN 3 dB.
- Adjust Δ MKR frequency to 30 kHz ± 50 Hz using R306.
- Enter RBW 3 kHz, SPAN 10 kHz, press ΔMKR → PEAK and REF.FIXED twice.
- Enter SPAN 3 MHz and RBW 1 MHz, press ΔMKR → PEAK and adjust Δ MKR level to 0 ± 0.02 dB using R93.
- Enter SPAN 300 kHz and RBW 100 kHz, press ΔMKR → PEAK and adjust ΔMKR level to ± 0.02 dB using R94.

5.3.3.5 Basic Assembly (A1)

The basic assembly A1 comprises the basic unit of the instrument with front panel A11, motherboard A12 and rear panel A13.

5.3.3.5.1 Front Panel (A11)

No adjustments are necessary on the front panel as a result of the digital circuit technology used. Tests are carried out by determining the corresponding logic levels.

5.3.3.5.2 Motherboard (A12)

The motherboard wiring is shown in circuit diagram 806.0516 S, the connector assignment in circuit diagram 804.8110 S.

5.3.3.5.3 Rear Panel (A13)

The connector assignment for the motherboard and the rear panel is shown in circuit diagram 804.8110 S.

5.3.4 Final Adjustment

1. Equipment required

- Signal generator

2. Preparation

- Apply a signal (frequency 21.4 MHz with a level of -14 dBm ± 0.1 dB) to X132/A1.
- Perform the following adjustment for defined setting of IF amplifier:
  PRESET
  REF.LEV. -18 dBm, ATT 10 dB, RBW 3 kHz
  LEVEL RANGE LIN,
  SPEC. FUNC.: Cal. Corr. off
  (the gain of the complete signal path can be adjusted manually in A33 by ± 2 dB using R155 and by + 2/-4 dB via the processor system).

3. Adjustment

- IF filter 2 (A32): adjust same gain with RBW 300 Hz and 3 kHz.
- Step gain (A33): adjust absolute gain using R155.

5.3.5 Summary of Adjustments on Display Unit Required When Replacing a Module

When replacing module	Adjust according to Section
A11	---
A12	---
A13	---
A15	---
A111	---
A21	---
A22	---
A31	5.3.3.4.7
A32	5.3.3.4.6, 5.3.4
A33	5.3.3.4.5, 5.3.4
A34	5.3.3.4.4
A35	---
A36	---
A37	---
A41	---
A43	---
A45	---
A52	5.3.3.2.2
A53	---
V530	5.3.3.2.3

5.4 Troubleshooting

When troubleshooting on the display unit, it is essential that the associated RF unit be connected. It is recommendable to use the longer connection cable between the RF unit and the display unit (FZ-2 811.0304.02). The instrument is set to a defined status by activating the on/off switch on the rear panel.

5.4.1 Selftest

Preconditions for a successful selftest are :

- Correct operation of the power supplies
- Correct functioning of the main processor system.

If the display unit fails, error messages are output on the LED panel of TRACE 11. See Section 5.4.2 for interpretation of the LED display and a description of faults. The results of the selftest is normally output on the screen.

5.4.2 List of Service Routines

Service functions are called by entering the following sequence:

Special Function ⇒ Service ⇒ $N_1.N_2N_3.N_4N_5.N_{DATA}$

The parameters have the following meaning:

$N_1 = 0$: Total instrument function (RF unit and display unit are tested simultaneously)

$N_1 = 1$: Function test in RF unit

$N_1 = 2$: Function test in display unit

N_2N_3: Module A N_2 N_3

N_4N_5: Max. 99 service functions per module

N_{DATA}: Number for the setting (not always required)

Service functions

Entry	Function	Module
2.31.00	Normal	IF Filter 1
2.31.01.0...255	Bandwidth 1 kHz to 3 MHz (normal, low noise)	
2.31.02.0...255	Bandwidth 1 kHz to 3 MHz (low distortion)	
2.32.00	Normal	IF Filter 2
2.32.01.0...255	Bandwidth 6 Hz to 1 kHz	
2.32.02.0...255	VCO -700 Hz to +700 Hz	
2.33.00	Normal	Step Gain
2.33.01.0...255	Var Gain	
2.33.02.0...255	Gain 0.1 dB / 1 dB	
2.33.03.0... 7	Gain 10 dB	
2.34.00	Normal	Lin/Log
2.34.01	0 dB Lin	
2.34.02	10 dB Lin	
2.34.03	20 dB Lin	
2.34.04	30 dB Lin	
2.34.05	40 dB Lin	
2.34.06	Log Wide	
2.34.07	Log Narrow	
2.43.01	Graphics test pattern 1	Graphics
2.43.02	Graphics test pattern 2	
2.43.03	Graphics test pattern 3	
2.43.04	Graphics test pattern 4	
2.43.05	Graphics test pattern 5	
2.46.01	FDC 5 1/4 "	I/O Board
2.46.02	FDC 8 "	
2.99.01	Set Port Address	
2.99.02.0...255	Output Value to Port (Main CPU)	
2.99.03	Read Port (16 Bit) (Main CPU)	
2.99.04.0...255	Output Value to Port (Graphics CPU)	
2.99.05	Read Port (16 Bit) (Graphics CPU)	

5.4.3 Typical Faults

No display on screen

a) Power supply operates incorrectly

If only the red LED lights up, either the rear panel blower is faulty or overheating disables the switch-on command until the instrument has cooled down.

At least one supply voltage is overloaded or interrupted if one of the two green LEDs does not light up.

It must first be established whether an overload or an interruption is present.

Open up the display unit. In order to operate the display unit on its own, set the plug-in jumper BR1 into position TEST. The circuit LPWRE1 is then bypassed (see basic circuit diagram of module monitoring).

Important:

If BR1 is inserted into position TEST (1,2), the display unit can be switched on using the rear panel power switch. The position of the ON key in the RF unit is then of no relevance.

The jumper BR1 is located at the bottom edge of module A21 located next to the AC transformer. The jumper can be reached after removing the base panel.

If neither or only one of the two green LEDs lights up after disconnecting all loads from the motherboard and switching on and off again, a fault is probably on module A21 or A22 (see troubleshooting on modules A21, A22).

If neither of the green LEDs lights up, the current drain of the instrument is too high, and it is necessary to find the faulty module.

First connect all modules to the motherboard again. Then, with the instrument switched off, disconnect one module at a time and check the green LEDs by switching on.

CAUTION:

When reassembling the display unit, insert the jumper into position NORMAL OPERATE again.

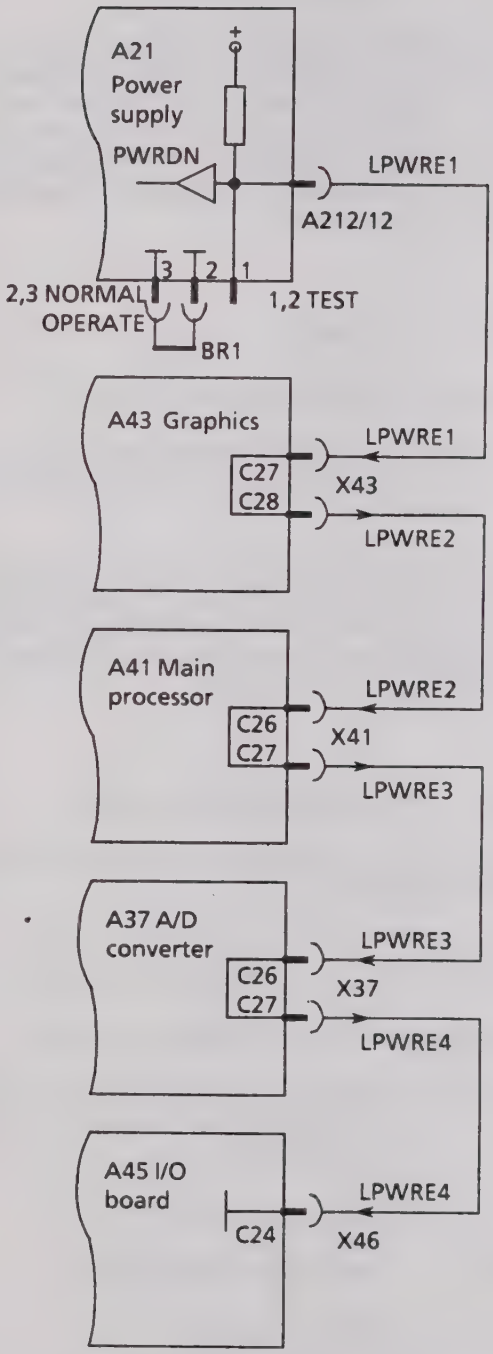

Basic circuit diagram of module monitoring
A43, A41, A37, A45

b) Power supply operates correctly

To be absolutely sure, check the supply voltages on the motherboard (CRT heating, switch-on signal of colour monitor: connection at X32/7 (DISPON ≙ HIGH ≥ 2.4 V).

Check module A51 (monitor)
Check module A52 (video board)
Check module A53 (socket board)
Check module A43 (graphics)
(video and synchronization signals)

Screen illuminated but no signal (noise)

Proceed as in Section 5.3.4. Faults in A31, A32 and A33 can thereby be found. Otherwise check for faults in A34 or A37.

The function of the display unit is more or less guaranteed if a signal of -14 dBm produces a full-scale display at all bandwidths and if the displayed noise is reduced accordingly when the resolution bandwidth is changed.

5.5 Required Measuring Equipment and Accessories

Item	Equipment	Required specifications	R&S equipment Order No.	Used with module
1	Digital multimeter AC/DC	1 µV to 250 V 0.1 mA to 1 A	UDS5 349.1510.02	A21 to A111
2	RF DC millivoltmeter	DC to 50 MHz 200 µV to 20 V	URV5 394.8010.02	A22 A31 A32 A33 A34 A51 A52
3	Plug-on divider	10:1	URV-Z6 292.5364.02	
4	Probe	---	URV5-Z7 395.2615.02	
5	Oscilloscope	0 to 100 MHz 5 mV/Div	BOL 374.2000.02	A21, A22, A31, A32 A33, A34 A35, A37, A41, A45, A51, A52 A111
6	Logic analyzer	20 MHz	LAS 344.4010.02	
7	Logic probe	HCMOS/TTL	---	
8	DC voltage source	0 to 20 V	NGPS 192.0061.02	A37
9	AF generator	1 Hz to 20 MHz	AFG 377.2100.02	A37
10	Pulse generator	10 ns	---	A37
11	Signal generator	10 Hz to 30 MHz	SMK 348.0010.03	A31 A32 A34 A35
12	Network analyzer	21.4 MHz	---	
13	Spectrum analyzer	---	FSA 804.8010.52	
14	Frequency counter	10 Hz to 30 MHz	---	A37, A41
15	Precision attenuation set	21.4 MHz 0 to 120 dB/50 Ω	DPVP 214.8017.52	A33

Accessories:

Service Kit FZ-1 (811.0010.02)
Connection Cable Set (for service purposes) FZ-2 (811.0304.02)
Coaxial connector SMC/Cannon connector system
50-Ω Terminators SMG
Plug-in jumpers (491.7042)

ROHDE&SCHWARZ

Liste mechanischer Teile

List of mechanical parts

Bilder zur Liste mechanischer Teile

Figures pertaining to list of mechanical parts

Liste zu den Bildern 5-10 ... 5-12 (Anzeige-Teil)

List for Figs. 5-10 to 5-12 (Display unit)

Lfd. Nr.	Kenn-zeichen	Menge	Benennung/Beschreibung	Sachnummer
No.	Unit/ Comp.No.	Qty.	Designation	Stock No.
1		1	MZ Haube, oben 5E 1/1 T570 Cover, top	806.1229
2		1	MZ Haube, unten 5E 1/1 T570 Cover, bottom	806.1235
3		2	MF Seitenleiste T570 Side strip	396.3096
4		4	VS M3x6 DIN 965 A4	081.9378
5		2	ZM Tragegriff T570 Carrying handle	396.3238
6		4	MR Griffbuchse Washer	396.3321
7		4	VS M 4x10 DIN 965 A4	081.9478
8		4	MF Abdeckung, Griffseite Cover, handle side	396.3338
9		2	KS Frontgriff 5E Front handle	396.5318
10		4	VS M 4x8 DIN 965 A4	396.1087
11			ZM Rückwandfuß, links 5E Rear-panel foot, left	396.4405
12			ZM Rückwandfuß, rechts 5E Rear-panel foot, right	396.4192
13			VS Ansatzschraube M4 K.D 7985 Screw	396.4492
14		2	MF Stapelnutabdeckung Cover for groove	396.4711
15		6M	WG HF Dichtungsschnur RF shielding cord	396.1035
16		4	WT Seitenfuß Side foot	396.4692
20	V530	1	ZM Colour Display Tube	805.8007
21		1	MZ Halterung Screen support	806.2119

Lfd. Nr.	Kenn-zeichen	Menge	Benennung/Beschreibung	Sachnummer
No.	Unit/ Comp.No.	Qty.	Designation	Stock No.
22		2	MZ Platte Plate	806.2131
23		6	VS M3x8 DIN 965 A4	081.9384
24	A53	1	EE Socket Board	805.7017.02
25		1	MZ Halterung Support	805.7169
26		1	ZM Schelle Clamp	805.7181
27		1	VS M 3x12 DIN 7985 A4	081.9090
28		2	VS M 4x6 DIN 933	032.0935
29		4	VS 4 DIN 137 A2	005.0315
30		4	VS 4,3 DIN 9021 A4	031.5191
31		2	VS 4,3 DIN 433 A4	082.4586
32		2	VS M 4x10 DIN 933	032.0958
33		2	MB Scheibe Washer	806.2160
34	W533	1	DX Massekabel W533 Ground cable	805.7123
35		2	MB Tülle Sleeve	806.2154
36		1	OF Zugfeder 6,4 x 0,6 x 29,8 Spring	247.4304
37		1	VL Lötöse 1-fahnig f. M8 Soldering tag, single for M8	034.9946
38	L531	1	LD Entmagnetisierspule Demagnetization coil	805.7117
40		1	MZ Montageplatte Mounting plate	804.9939
42	X2	1	FT Klinkeneinbaubuchse 3P Jack socket	516.8175
44	X1	1	FT Klinken-Schaltbuchse Jack socket	252.5834
45	A111	1	ED Keyboard Display	805.6310

Lfd. Nr.	Kenn-zeichen	Menge	Benennung/Beschreibung	Sachnummer
No.	Unit/ Comp.No.	Qty.	Designation	Stock No.
46		7	VS M 3x6 DIN 7985 A4	081.9061
47		7	VS 3 DIN 137 A2	005.0296
49		6	VS M 3x8 DIN 965 A4	081.9384
60		1	MP Bildschirmrahmen Screen frame	396.6266
61		8	MP Tastenkappe Key cap	396.6314
62		1	SB Kontaktmatte Contact panel	396.6272
63		1	ZE Kontaktplatte Contact plate	396.6289
64		1	KB Frontplatte (englisch) Front panel (English)	804.9951
65		3	VS Senkschraube M 1,6x3 lichtgrau Countersunk screw M1.6 x 6, light grey	396.1070
68	W1	1	DX Verbindungskabel W1 Cable	808.6657
69	W2	1	DX Verbindungskabel W2 Cable	808.6670
70		8	MB Schraube Screw	808.6786
71		1	ZM Deckel Cover	804.9600
72		8	VS M 3x6 DIN 965	081.9378
73		14	VS M 3x6 DIN 7985	081.9061
80	A31	1	EE IF-Filter 1 IF filter 1	805.5337.02
81	A32	1	EE IF-Filter 2 IF filter 2	805.4318.02
82	A34	1	EE Lin/Log	805.2315.02
83	A33	1	EE Step Gain	805.3311.02
84	A45	1	EE I/O Board	805.0812.02

Lfd. Nr.	Kenn-zeichen	Menge	Benennung/Beschreibung	Sachnummer
No.	Unit/ Comp.No.	Qty.	Designation	Stock No.
87	A37	1	EE A/D Converter	805.1319.02
89	A41	1	EE Main Processor	810.2010.02
91	A43	1	EE Graphics	805.0712.02
95	W154	1	DX HF-Kabel W154 RF cable	806.1541
96	W175	1	DX HF-Kabel W175 RF cable	806.1812
97	W151	1	DX HF-Kabel W151 RF cable	806.1529
98	W150	1	DX HF-Kabel W150 RF cable	806.1512
99	W146	1	DX HF-Kabel W146 RF cable	806.1629
103	W153	1	DX HF-Kabel W153 RF cable	806.1535
107	W157	1	DX HF-Kabel W157 RF cable	806.1570
110	W156	1	DX HF-Kabel W156 RF cable	806.1564
111	W155	1	DX HF-Kabel W155 RF cable	806.1558
120		1	MZ Kabelkanal Cable duct	804.9574
121		1	VS M 3x6 DIN 7985 A4	081.9061
129		1	ZM Winkel Bracket	804.9722
130		5	VS M 3x8 DIN 965 A4	081.9384
131		1	MZ Platte Plate	805.9549

Lfd. Nr.	Kenn-zeichen	Menge	Benennung/Beschreibung	Sachnummer
No.	Unit/ Comp.No.	Qty.	Designation	Stock No.
132	E2	1	EV Lüfter Blower	531.7130
133		1	EV Lüftergitter Blower grid	852.0596
134		4	VS M 3x6 DIN 7985 A4	081.9061
135		4	VS 3 DIN 137 A2	005.0296
136		4	VS 3,2 DIN 125 A4	082.4670
137		2	MP Verschlußstopfen Stopper	528.8500
138	X4 bis/to X11	8	FJ Einbaubuchse syst. BNC BNC socket	099.9186
139		9	VL Lötöse 18x10 Solder tag	035.0813
142	X3	1	FT Klinkeneinbaubuchse 3 P Jack socket	516.8175
144	W140	1	DX Kabel W140 Cable	806.1787
145	W136	1	DX Kabel W136 Cable	806.1741
147	W137	1	DX Kabel W137 Cable	806.1758
148	W133	1	DX Kabel W133 Cable	806.1712
149	X132	1	DX Buchseneinheit X132 Socket assembly	806.1612
150	W145	1	DX HF-Kabel W145 RF cable	806.1664
151	W147	1	DX HF-Kabel W147 RF cable	806.1658
152	W135	1	DX Kabel W135 Cable	806.1735
153	W134	1	DX Kabel W134 Cable	806.1729
154		2	VS M 2,5x10 DIN 7985	088.0053
155		2	VS 2,7 DIN 125	082.4663
156		2	VS 2,6 DIN 137	005.0280
157		2	VS M 2,5 DIN 934	088.0230

Lfd. Nr.	Kenn-zeichen	Menge	Benennung/Beschreibung	Sachnummer
No.	Unit/ Comp.No.	Qty.	Designation	Stock No.
160		10	FM Verriegelungsbolzen M. M3 Bolt	099.7783
169		2	VS DIN 965 - M 3 x 6 - A4	081.9378
170		1	MZ Trafo-Halterung Transformer support	805.8288
171		1	MZ Platte Plate	805.8259
172		1	VS M 6x16 DIN 965	071.3454
173	T1	1	ZE Transformator Transformer	805.8236
174		4	VS M 3x10 DIN 7985	081.9084
176		1	VS M 4x8 DIN 7985	081.9178
177		1	VS 4,3 DIN 125	082.4686
178		1	VS 4,3 DIN 6797	016.2837
179		1	FV Flachstecker Gr. 6,3 Terminal	543.6705
181		1	VS M 4 DIN 934	016.4400
184	S1	1	SK Wippschalter 2pol. Rocker switch, 2-pole	553.2925
186	X1	1	FN Netzfilter mit Spannungswähler AC filter with voltage selector	099.3313
187		2	VS M 3x10 DIN 965	081.9390
190		1	MZ Abdeckung Cover	805.8036
191		5	KZ Käfig Insert	085.1936
192		5	VS M 3x6 DIN 7985	081.9061
193		5	VS 3 DIN 137	005.0296
195	E1	1	ZE Lüfter Blower	808.4177
196		4	VS M 3x6 DIN 7985	081.9061
198		4	VS 3 DIN 137	005.0296
199		1	MZ Befestigungswinkel Mounting bracket	805.8071

Lfd. Nr.	Kenn-zeichen	Menge	Benennung/Beschreibung	Sachnummer
No.	Unit/ Comp.No.	Qty.	Designation	Stock No.
200	A22	1	ED Power Supply D-A22	805.8813.02
201		1	MZ Koppelplatte Coupling plate	805.8094
202		4	VS M 3x6 DIN 7985	081.9061
204		2	VS 3,2 DIN 6797	016.2820
205		4	VS M 3x6 DIN 7985	081.9061
206		2	VS 3,2 DIN 125	082.4670
208		1	ZM Befestigungswinkel 1 Mounting bracket 1	808.4077
209	A21	1	ED Power Supply D-A21	808.8513.02
210		9	VS M 3x6 DIN 7985	081.9061
211		5	VS 3 DIN 137	005.0296
212		4	VS 3,2 DIN 125	082.4670
215		1	ZM Platte Plate	805.8265
216		5	VS M 3x6 DIN 7985	081.9061
217		5	VS 3,2 DIN 125	082.4670
218		4	VS M 3x8 DIN 7985	081.9078
219		4	VS 3,2 DIN 125	082.4670
220		1	ZM Z-Winkel Z bracket	805.8065
221		2	ZM Geräteverbinder U-link	806.1370
225		2	ZM Klotz Block	806.1358
226		6	VS M 3x10 DIN 7985	081.9084
250		4	MG Rahmenschiene T570 Frame rail	396.2383
251		16	VS M 3x8 DIN 965	081.9384
252		1	ZM Frontrahmen 5E 1/1 Front frame	396.2154
253		1	ZM Rückrahmen 5E 1/1 Rear frame	396.2290
260		2	MZ Platte Plate	396.9388

Lfd. Nr.	Kenn-zeichen	Menge	Benennung/Beschreibung	Sachnummer
No.	Unit/ Comp.No.	Qty.	Designation	Stock No.
261		2	MZ Leiste Strip	396.9394
262		4	VS M 3x16 DIN 965	081.9410
265		1	ZM Querwand 1 Transverse panel 1	804.9774
266	B1	1	EL Lautsprecher 0,5 W 150 Ohm Loudspeaker	243.1298
267		1	ZM Platte Plate	804.9616
268	W170	1	DX Kabel W170 Cable	806.1670
269		2	VS M 3x8 DIN 965	081.9384
270		1	ZM Winkel Bracket	804.9851
271		4	VS M 3x6 DIN 7985	081.9061
272		6	WT Führungsleiste f. DS 3E Gr. Guide rail	396.7356
273		3	VS M 3x8 DIN 965	081.9384
276	A36	1	EE AF-Unit	809.8518.02
277	A35	1	EE IF Counter	806.0016.02
280		1	ZM Wand vorne Front panel	804.9716
281		1	ZM Längswand 2 Side panel 2	804.9797
282		1	ZM Wand, hinten Rear panel	804.9751
283		2	VS M 3x6 DIN 7985	081.9061
284		10	VS M 3x10 DIN 7985	081.9084
285		10	VS M 3x10 DIN 965	081.9390
286		2	MZ Schiene Rail	804.9700
287		6	VS M 3x6 DIN 7985	081.9061
290		1	ZM Längswand 1 Side panel 1	804.9739
291		1	MZ Platte Plate	806.4363

Lfd. Nr.	Kenn-zeichen	Menge	Benennung/Beschreibung	Sachnummer
No.	Unit/ Comp.No.	Qty.	Designation	Stock No.
292		1	MZ Platte Plate	806.4357
293		1	ZM Winkel Bracket	804.9822
294		1	ZM Querwand 2 Transverse panel 2	804.9816
295		6	VS M 3x6 DIN 965	081.9378
296		2	WT Führungsleiste f. DS 2E Bl. Guide rail	396.7333
300	A51	1	ED Monitor	805.7317.02
301		1	ZM Kühlwinkel 1 Heat sink bracket 1	805.7769
302		1	ZM Kühlwinkel 2 Heat sink bracket 2	805.7746
303		1	ZM Kühlwinkel 3 Heat sink bracket 3	805.7723
304		3	AZ Montageclip Clip	805.7798
305		10	VS M 3x8 DIN 7985	081.9078
306		10	VS 3 DIN 137	005.0296
307		1	ZM Winkel Bracket	804.9622
308		3	VS M 3x6 DIN 7985	081.9061
310		7	VS M 3x10 DIN 7985	081.9084
311		1	MZ Abdeckung Cover	804.9639
320	A12	1	ED Motherboard	806.0516.02
321		1	MZ Platte Plate	804.9745
322		1	MZ Platte Plate	804.9768
323		3	VS M 3x6 DIN 965	081.9378

Lfd. Nr.	Kenn-zeichen	Menge	Benennung/Beschreibung	Sachnummer
No.	Unit/ Comp.No.	Qty.	Designation	Stock No.
324		4	VS M 3x8 DIN 7985	081.9078
325		4	VS 3 DIN 137	005.0296
326		3	KZ Käfig Insert	085.1936
327		1	MZ Abdeckung Cover	806.0768
330		8	VS 3,2 DIN 125	082.4670
331		11	VS 3 DIN 137	005.0296
332		11	VS M 3x6 DIN 7985	081.9061
335		1	MZ Schiene 3 Rail 3	804.9668
336		11	VS M 3x10 DIN 965	081.9390
337		1	MZ Schiene 5 Rail 5	804.9680
338		1	MZ Schiene 4 Rail 4	804.9674
339		3	VS M 3x6 DIN 965	081.9378
350	A15	1	EE Sub-Motherboard	806.0916.02
351		1	ZM Schiene 1 Rail 1	804.9874
352		1	ZM Schiene 2 Rail 2	804.9897
353		6	VS M 3x10 DIN 965	081.9390
354		2	VS M 3x8 DIN 965	081.9384
360		12	WT Führungsl. f. DS 3E GR. Guide rail	396.7356
361		2	WT Führungsl. f. DS 3E Gb Guide rail	396.7362
362		2	WT Führungsl. f. DS 2E BL Guide rail	396.7333
363		2	WT Führungsl. f. DS 2E RT Guide rail	396.7304
370	A52	1	EE Video Board	805.7817.02

Gehäuse

Aufbau

Der Aufbau besteht aus einer tragenden Aluminium-Druckguß-Rahmenkonstruktion mit gerätespezifischer Front-, Montage- und Rückplatte, die mit einer Ober- und Unterhaube (= Beplankung) ummantelt ist.

Rahmen und Beplankung:

Casing

Construction

The construction consists of a self-supporting aluminium-cast frame with front, mounting and rear panel, top and bottom covers (= panelling).

Frame and panelling:

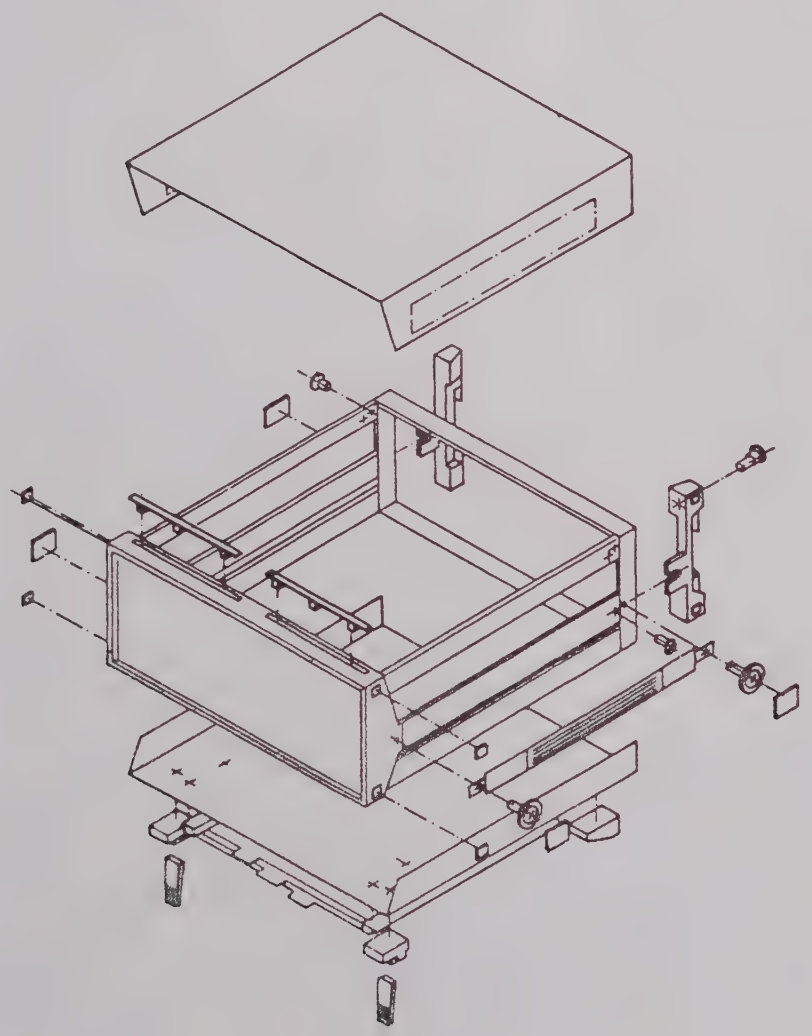

Dichtschnur (nur bei Geräten mit erhöhtem Schirmdämpfungsbedarf vorhanden) jeweils in die umlaufende Nut einlegen.

Insert the braided cord (provided only for instruments requiring a high degree of shielding) into the respective groove.

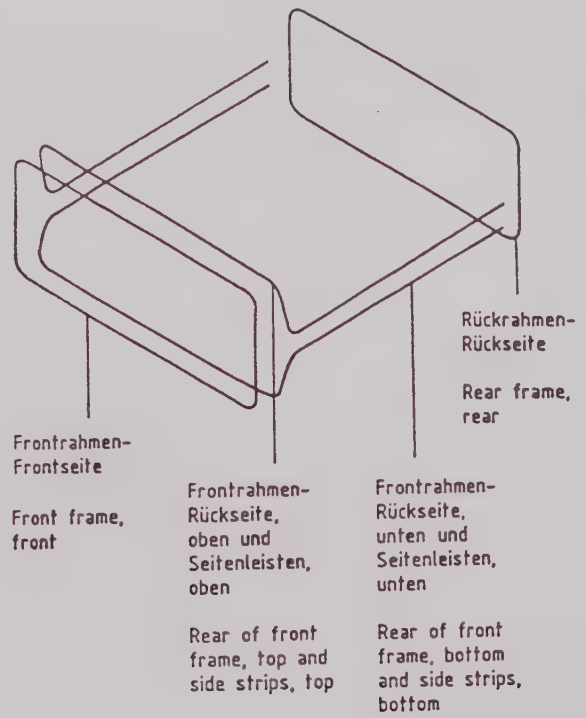

Öffnen und Schließen des Gehäuses

Die gute Schirmdämpfung der Kompaktbauweise 90 erfordert häufige Kontaktstellen und hohe Paßgenauigkeit. In Verbindung mit einem leichten Anlagedruck, der mit dem Festziehen der Rückwandfußschrauben erreicht wird, erhält man einen straffen Sitz der Ober- und Unterhaube auf dem Rahmen.

Zum ***Öffnen*** muß man die Rückwandfußverschraubung lösen und die Füße nach rückwärts abziehen (Schrauben bleiben im Fuß haften). Je nach Bedarf läßt sich nun Ober- bzw. Unterhaube ebenfalls nach rückwärts abnehmen. Sitzen die Hauben sehr fest, erleichtert man das Abziehen durch abwechselndes Hebeln in Pfeilrichtung mit einem Schraubenzieher an beiden Geräteseiten (siehe Bild).

Zum ***Schließen*** des Gehäuses werden erst die Frontkanten der Hauben in die umlaufende Nut des Frontrahmens und der Seitenleisten eingeführt und dann in die Erhöhungen am Rückrahmen eingerastet. Das Gerät ist wieder geschlossen, wenn die Rückwandfüße eingeschoben und die Schrauben festgezogen sind.

Opening and closing the cabinet

To obtain the high degree of shielding of design 90, many points of contact and accurate fitting are employed. When exerting a slight pressure by tightening the rear-panel feet, tight fitting of the top and bottom covers is ensured.

To *open* the cabinet, first undo the rear panel feet screws and withdraw the feet (captive screws). It is now possible to detach top and bottom cover if required. If the fitting of these cover plates is very tight, removal can be facilitated by alternately levering on both sides of the instrument using a screwdriver (see illustration).

To ***close*** the cabinet, insert the front edges of the covers into the groove of the front frame and the side strips and lock them into the catches on the rear frame. The cabinet is closed when the rear-panel feet are inserted and the screws tightened.

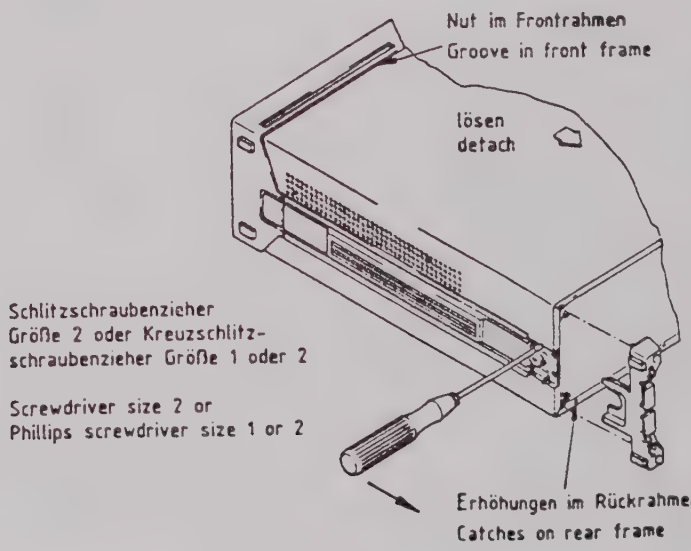

Ober- und Unterhaube werden durch die Rückwandfußverschraubung befestigt.

Top and bottom covers are fixed by screwing feet to rear panel.

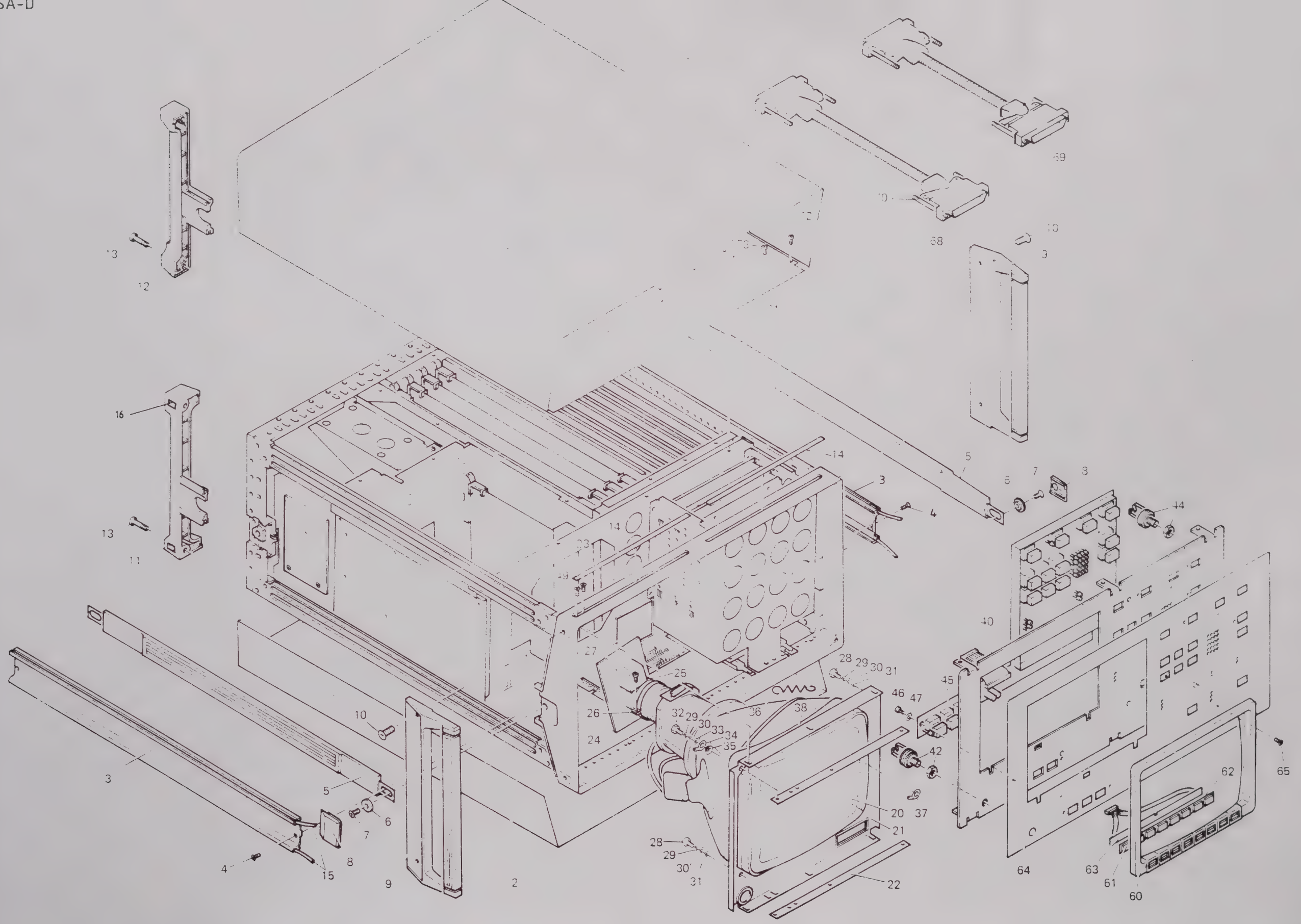

Bild 5-10
Fig. 5-10

FSA-D

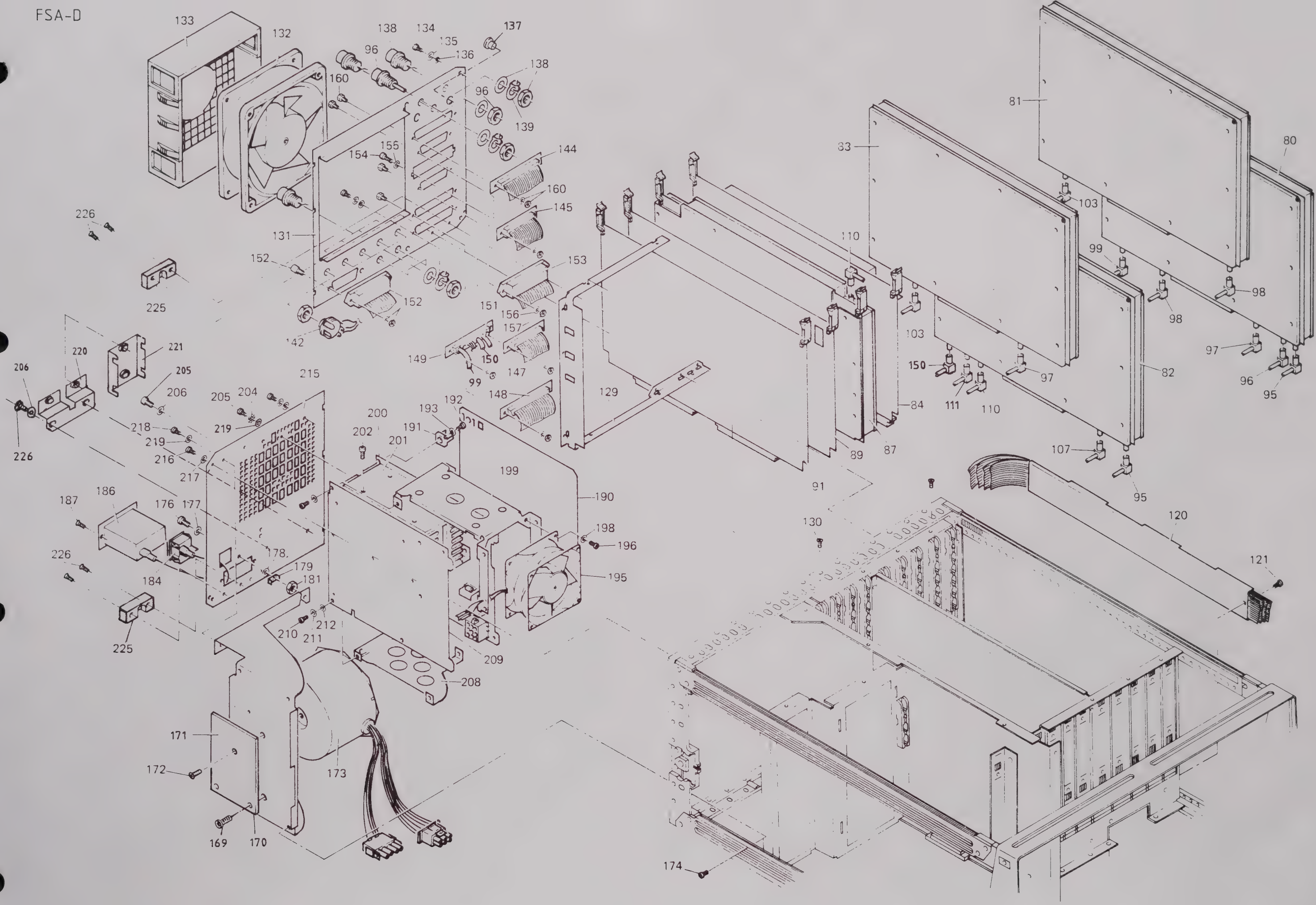

804. 8110. 52 D/E-2

Bild 5-11
Fig. 5-11

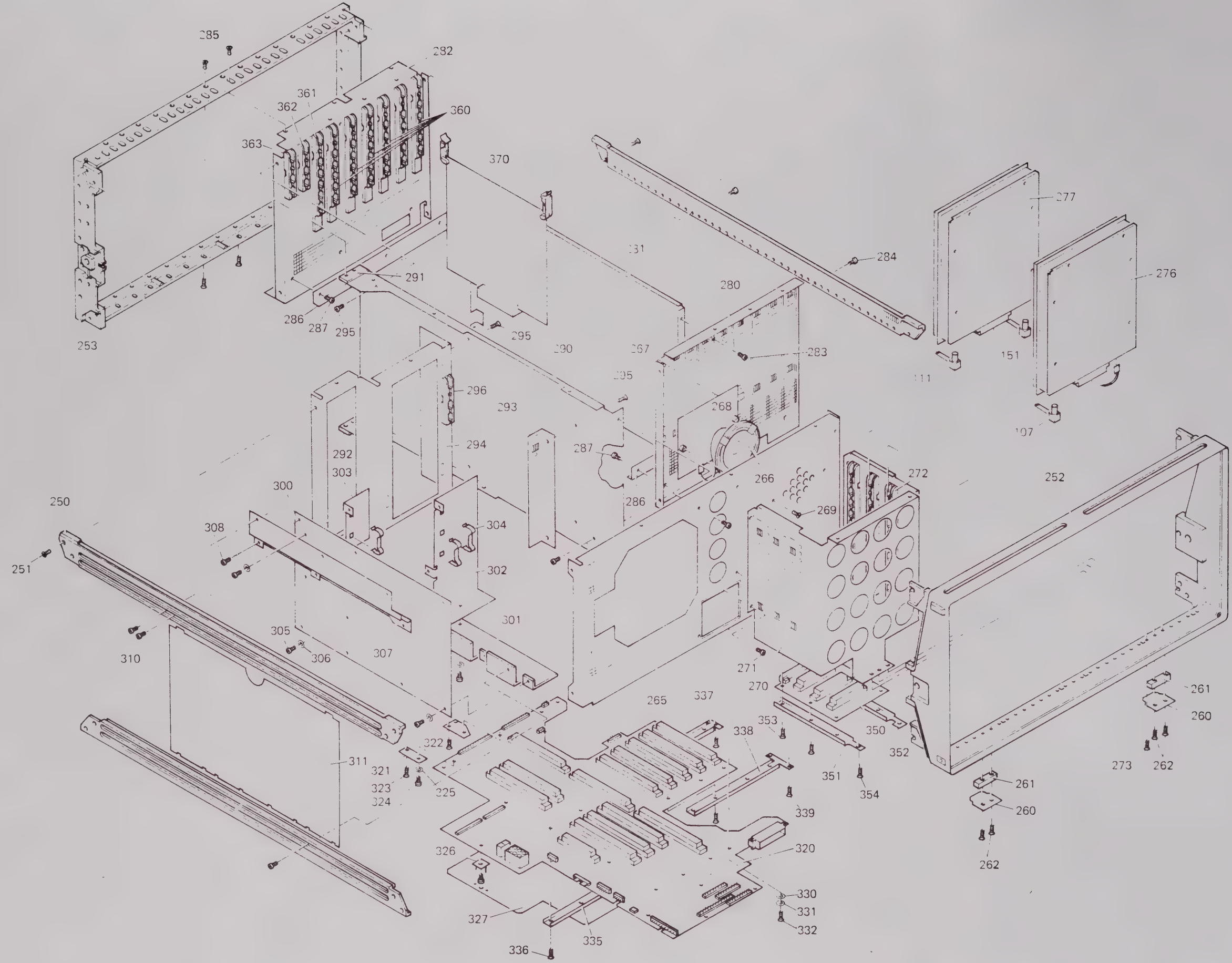
285
282
361
362
360
363
370
253
286
287
295
291
295
290
231
284
280
277
276
151
111
107
283
267
295
296
293
294
292
303
300
287
268
266
272
252
250
286
269
308
304
302
301
251
305
306
307
310
271
270
265
337
261
260
262
273
353
338
350
352
351
354
339
320
330
331
332
311
321
323
324
322
325
326
327
335
336

ROHDE&SCHWARZ

Schaltteillisten
Stromläufe
Bestückungspläne
Part lists
Circuit diagrams
Components plans
Listes des pièces détachées
Schémas de Circuit
Plans des composants

(R 29500 Bl 2)
0915.1000 BL 2

ROHDE&SCHWARZ

R&S-Schlüsselliste
R&S key list
Liste des symboles de référence R&S

Die R&S-Schaltteillisten nennen in der Spalte "Benennung/Beschreibung" die technischen Daten der Bauelemente in Kurzform. Die Art des Bauelements (z.B. Schicht-, Draht-Widerstand usw.) beschreiben die 2 Kennbuchstaben vor der "Benennung" (evtl. auch vor der "Sachnummer"), die nachfolgend erklärt werden. In Ersatzteil-Bestellungen an R&S ist stets die Angabe der vollständigen Sachnummer erforderlich.

The R&S Parts Lists give the technical data of the components in short form in the column "Benennung/Beschreibung" (designation). The type of component (e.g. depos.-carbon resistor, wire-wound resistor etc.) is indicated by 2 identification letters before the designation, possibly also before the "Sachnummer" (order number), which are explained below. When ordering spare parts from R&S, the complete order number must always be specified.

La colonne «Désignation/description» des listes de pièces de R&S indique les caractéristiques des éléments sous forme abrégée. Le type d'élément (p. ex. résistance à couche, résistance bobinée etc. ...) est décrit par les deux lettres précédant la désignation (et éventuellement le numéro de référence), dont voici l'explication. Prière d'indiquer le numéro de référence («Sachnummer») complet dans toute commande de pièces de rechange.

Teile-familie	Art des Bauelementes	Parts family	Type of component	Famille	Type d'élément
A	**Aktive Bauelemente, Halbleiter**	**A**	**Active components, semiconductors**	**A**	**Composants actifs, semiconducteurs**
AD	Universaldiode, z.B. Gleichrichter, Sperrdiode	AD	General-purpose diode, e.g. rectifier, high-resistance diode	AD	Diode d'usage général, p.ex. redresseur, diode à haute résistance
AE	Spezialdiode, z.B. Tunnel-, Kapazitäts-, Zener-Diode	AE	Diode (special), e.g. tunnel diode, varactor, Zener diode	AE	Diode spéciale, p.ex. diode tunnel, varactor, diode Zener
AF	Fotohalbleiter, z.B. Foto-Diode, -Transistor, -Widerstand, Leuchtdiode	AF	Photo-semiconductor, e.g. resistor, diode, transistor; LED	AF	Semiconducteur photoélectrique, p.ex. diode, transistor, résistance photoél., DEL
AG	Leistungs-Gleichrichter, z.B. Thyristor, Triac, Selengleichrichter	AG	Power rectifier, e.g. thyristor, triac, selenium rectifier	AG	Redresseur de puissance, p.ex. thyristor, triac, redresseur, au sélénium
AK	Kleinsignal-Transistor	AK	Small-signal transistor	AK	Transistor faible puissance
AL	Leistungs-Transistor	AL	High-power transistor	AL	Transistor grande puissance
AM	Spezial-Transistor, z.B. FET, MOSFET	AM	Transistor (special), e.g. FET, MOS-FET	AM	Transistor spécial, p.ex. TEC, MOSTEC
AP	Peltier-, Hall-Element	AP	Peltier element, Hall element	AP	Element Peltier, élement Hall
AR	Röhre für Empfänger, Verstärker, Gleichrichter	AR	Valve for receiver, amplifier, rectifier	AR	Tube pour récepteur, amplificateur, redresseur
AS	Spezialröhre, z.B. Senderöhre, EW-Widerstand, Stabilisator	AS	Valve (special), e.g. for transmitter, baretter, ballast valve	AS	Tube (spécial), p.ex. pour émetteur, résistance fer-hydrogène, ballast
AT	Katodenstrahlröhre, z.B. Bildröhre, Ziffern-Anzeigeröhre	AT	Cathode ray tube, e.g. picture tube, digital indicator tube	AT	Tube à rayon cathodique, p.ex. tube à image, tube à affichage numérique
AZ	Zubehör für Halbleiter u. Röhren	AZ	Accessories for semiconductors and valves	AZ	Accessoires pour semiconducteurs et tubes
B	**Bausteine**	**B**	**PC boards, chips**	**B**	**Cartes imprimées, puces**
BC	Integr. Schaltkreis (Microcomp.)	BC	Integrated circuit (interface, A/D)	BC	Circuit intégré (microprocesseur)
BD	R&S-Dünnschicht- und Dickschichtschaltung	BD	R&S thinfilm or thickfilm circuit	BD	Circuit R&S à couche mince ou épaisse
BG	R&S-spezifische Gate-Arrays	BG	R&S gate arrays	BG	Circuits intégrés prédiffusés R&S
BJ	Integrierter Schaltkreis (Interface, A/D-Wandler)	BJ	Integrated circuit (interface, A/D converter)	BJ	Circuit intégré (interface, convertisseur A/N)
BL	Log. Schaltkreis z.B. DTL, TTL, HTL, ECL, C-MOS	BL	Logic circuit, e.g. DTL, TTL, HTL, ECL, C-MOS	BL	Circuit logique, p.ex. DTL, TTL, HTL, ECL, C-MOS
BM	Hybridbaustein, z.B. Mischer, Tuner, Modulator	BM	Hybrid chip, e.g. mixer, tuner, modulator	BM	Puce hybride, p.ex. mélangeur, tuner, modulateur
BO	Analogschaltkreis, z.B. Operationsverstärker	BO	Analog circuit, e.g. operational amplifier	BO	Circuit analogique. p.ex. amplificateur opérationnel
BP	Optoelektronischer Baustein, z.B. Anzeigeeinheit, Koppler	BP	Optoelectronic component, e.g. display, coupler	BP	Composant optoélectronique, p.ex. afficheur, coupleur
BS	Schalt- und Steuerbaustein, elektronischer Sensor	BS	Switching and control modul, electronic sensor	BS	Modul de commutation et de commande, sonde électronique
BV	Stromversorgung, Übersp.-Schutz	BV	Power pack, protective circuit	BV	Alimentation, protection surcharge
BZ	Zubehör	BZ	Accessories	BZ	Accessoires

Teile-familie	Art des Bauelementes	Parts family	Type of component	Famille	Type d'élément
C	**Kondensatoren**	**C**	**Capacitors**	**C**	**Condensateurs**
CB	Bypass-, Durchf.-Kondensator	CB	Bypass capacitor, feed-through capacitor	CB	Condensateur bypass, condensateur de traversée
CC	Keramischer Kondensator	CC	Ceramic capacitor	CC	Condensateur céramique
CD	Drehkondensator	CD	Variable capacitor	CD	Condensateur variable
CE	Elektrolytkondensator	CE	Electrolytic capacitor	CE	Condensateur électrolytique
CG	Glimmerkondensator	CG	Mica capacitor	CG	Condensateur au mica
CH	Sperrschichtkondensator	CH	Semiconductor capacitor	CH	Condensateur semiconducteur
CK	Kunstfolienkondensator	CK	Synthetic-foil capacitor	CK	Condensateur à feuille synthétique
CL	Ker. Hochsp.-Kondensator	CL	HV capacitor (ceramic)	CL	Condensateur HT céramique,
CM	Metallpapier-Kondensator	CM	MP capacitor	CM	Condensateur à papier métallisé
CN	Kondensatornetzwerk	CN	Capacitor network	CN	Réseau capacitif
CP	Papierkondensator	CP	Paper capacitor	CP	Condensateur au papier
CS	Störschutzkondensator	CS	Interference-suppression capacitor	CS	Condensateur anti-parasite
CT	Trimmkondensator	CT	Trimmer capacitor	CT	Condensateur ajustable
CV	Vakuum-Kondensator	CV	Vacuum capacitor	CV	Condensateur à vide
D	**Drähte, Leitungen**	**D**	**Wires, lines**	**D**	**Fils, lignes**
DD	Schalt- und Wickeldraht	DD	Hook-up or winding wire	DD	Fil de câblage, fil de bobinage
DF	Flachleitung, Litze	DF	Flat multiple line, stranded wire	DF	Ligne plate, ligne torsadée
DG	Abgeschirmte Leitung	DG	Shielded line	DG	Ligne blindé
DH	Koaxialkabel	DH	Coaxial line	DH	Ligne coaxiale
DJ	Isolierschläuche, Schrumpfschläuche, Wellrohre, Schutzschläuche	DJ	Insulating sheaths, shrink-on sleeves, corrugated tubes, protective tubes	DJ	Gaines isolantes, gaines thermorétractables tubes ondulés, gaines protectrices
DL	HF-Litzen	DL	RF stranded wires	DL	Lignes torsadées RF
DM	Schaltlitzen (mehrdrähtige Leiter)	DM	Multi-conductor wires	DM	Lignes torsadées (multiconducteurs)
DN	Antenne	DN	Antenna	DN	Antenne
DO	Lichtleiter (optisch)	DO	Optical waveguides	DO	Guides d'onde optiques
DP	Leiterplatten (unbestückt)	DP	Printed circuit boards (bare)	DP	Cartes imprimées (non équipées)
DQ	Multilayer (unbestückt)	DQ	Multilayer boards (bare)	DQ	Cartes multicouche (non équipées)
DS	Anschlußkabel (mehradrig)	DS	Connecting cable, multicore	DS	Câble de connexion (multiconducteur)
DU	Substratplatten für Dickschichtschaltungen	DU	Substrate boards for thickfilm circuits	DU	Cartes à substrat pour circuits à couche épaisse
DW	Festmantelkabel	DW	Rigid cables	DW	Câbles rigides
E	**Elektrische Teile**	**E**	**Electric parts**	**E**	**Organes électriques**
EB	Blei-, NC-Akku, Batterie	EB	Lead or alkaline accumulator, battery	EB	Accumulateur Pb/NC, batterie
ED	Gedruckte Schaltung (bestückte Leiterplatte), nicht steckbar	ED	Printed circuits (assembled), non-pluggable	ED	Circuits imprimés (équipés) non enfichables
EE	Gedruckte Schaltung (bestückte Leiterplatte), steckbar	EE	Printed circuits (assembled), pluggable	EE	Circuits imprimés (équipés) enfichables
EF	Glühlampe, Leuchte	EF	Incandescent lamp, pilot lamp	EF	Lampe à incandescence, voyant
EG	Glimmlampe, Entladungslampe	EG	Glow lamp, discharge lamp	EG	Lampe à luminescence lampe à décharge
EK	Kontakt-Streifen, -Feder	EK	Contact clip, contact spring	EK	Lampe de contact, ressort de contact
EL	Lautsprecher, Kopfhörer, Mikrofon	EL	Loudspeaker, headphones, microphone	EL	Haut-parleur, casque, microphone
EM	Motor, Hubmagnet, Drehfeldsystem	EM	Motor, lifting magnet, synchro system	EM	Moteur, électro-aimant de levage, système synchro
EO	Oszillator, z.B. Quarzoszillator	EO	Oscillator, e.g. crystal oscillator	EO	Oscillateur p.ex. oscillateur à quartz
EP	Tief-, Band-, Hochpaß, Bandsperre, Diskriminator	EP	Lowpass, bandpass, highpass filter, band-stop filter, discriminator	EP	Filtre passe-bas, passe-bande, passe-haut, suppression de bande, discriminateur
EQ	Schwing-, Filter-Quarz	EQ	Oscillator or filter crystal	EQ	Quartz oscillateur, quartz de filtre
ER	Resonator, piezoelektr./magnetostriktiv	ER	Resonator, piezoelectric/ magnetostrictive	ER	Résonateur piézo-électrique/ magneto-strictif
ES	Passive SHF-Bauteile	ES	Passive SHF-components	ES	Composant SHF passif
ET	Thermostat	ET	Thermostat	ET	Thermostat
EV	Lüfter, Gebläse	EV	Ventilator, blower	EV	Ventilateur, soufflerie

R&S-Schlüsselliste
R&S key list
Liste des symboles de référence R&S

ROHDE&SCHWARZ

Teile-familie	Art des Bauelementes	Parts family	Type of component	Famil-le	Type d'élément
F	**Fassungen, Steckverbindungen**	**F**	**Sockets, connectors**	**F**	**Douilles, connecteurs**
FG	Koax-Umrüstsatz	FG	Coaxial screw-in assembly	FG	Ensemble vissable coaxial
FH	Koax-Übergang auf Fremdsystem	FH	Coaxial adapter	FH	Adaptateur coaxial
FJ	BNC-Systemteil	FJ	BNC screw-in assembly	FJ	Ensemble vissable BNC
FK	Koaxial-UHF-Systemteil	FK	Coaxial UHF screw-in assembly	FK	Ensemble vissable coaxial UHF
FM	Mehrfachstecker, Buchsenleiste	FM	Multipoint connector	FM	Connecteur multiple
FN	Netz-Steckverbindung	FN	AC-supply connector	FN	Connecteur secteur
FO	Runde Mehrfach-Steckverbindung	FO	Round multipoint connector	FO	Connecteur multipoles rond
FP	Druckschalt-Steckverbindung	FP	Multipoint connector for PC boards	FP	Connecteur multipoles pour cartes imprimées
FR	Fassung für Lampe, Sicherung, usw.	FR	Socket for lamp, fuse, etc.	FR	Douille pour lampe, fusible etc. . . .
FT	Schwachstrom-Steckverbindung	FT	LV plug and socket	FT	Connecteur pour faible courant
FU	Hochspannungs-Steckverbindung	FU	HV plug and socket	FU	Connecteur pour haute tension
FV	Verbinder (z.B. AMP)	FV	Push-on connector	FV	Connecteur à enfichage
FZ	Zubehör für koax. Bauelemente	FZ	Accessories for coax. components	FZ	Accessoires pour composants coax.
H	**Software**	**H**	**Software**	**H**	**Logiciel**
HP	Software-Komponenten und Software-Module	HP	Rights to software components and software modules	HP	Droits d'utilisation de composants et modules logiciel
HS	Auf Informationsträger geladene Software	HS	Software data media	HS	Logiciel sur support d'information
J	**Meßinstrumente**	**J**	**Indicators**	**J**	**Indicateurs**
JD	Drehspul-Anzeigeinstrument	JD	Moving-coil meter	JD	Galvanomètre à cadre mobile
JE	Dreheisen-Anzeigeinstrument	JE	Moving-iron meter	JE	Galvanomètre à fer mobile
JF	Frequenzmesser	JF	Frequency meter	JF	Fréquencemètre
JG	Drehspulinstrument mit Gleichrichter	JG	Moving-coil meter with rectifier	JG	Galvanomètre à cadre mobile avec redresseur
JH	Betriebsstundenzähler	JH	Operating-hours counter	JH	Compteur d'heures de fonctionnement
JJ	Impulszähler	JJ	Pulse counter	JJ	Compteur d'impulsions
JK	Kleinst-Instrument, z.B. Abstimmanzeiger	JK	Mini-instrument, e.g. tuning indicator	JK	Petit indicateur, p.ex. indicateur d'accord
JM	Mechanisches Zählwerk	JM	Mechanical counter	JM	Compteur mécanique
JP	Projektions-Instrument (Leuchtziffer)	JP	Digital display	JP	Afficheur numérique
JQ	Quotientenmesser (Kreuzspulinstrum.)	JQ	Ratiometer (cross coul)	JQ	Quotientmètre (à cadres croisés)
JU	Uhrwerk	JU	Clockwork	JU	Mouvement d'horlogerie
JW	Elektrodyn. Anzeigeinstrument	JW	Electrodynamic meter	JW	Instrument électrodynamique
L	**Induktivitäten, Magnetik**	**L**	**Inductors, magnetic components**	**L**	**Composants inductifs et magnétiques**
LB	Blech- und Schnittbandkern mit Zubehör	LB	Laminated and C-cores with accessories	LB	Noyaux feuilletés et noyaux de type C, avec accessoires
LC	Keramische Spule	LC	Ceramic coil	LC	Bobine céramique
LD	Netz-, HF-Drossel, Df-Filter	LD	Choke, lead-through filter	LD	Self de choc, filtre dē traversée
LE	Einzelkreis, Bandfilter	LE	Single tuned circuit, bandpass filter	LE	Circuit accordé, filtre passe-bande
LF	Ferritkern mit Zubehör	LF	Ferrite cores with accessories	LF	Noyaux en ferrite avec accessoires
LK	Karbonyleisenkern und elektrischer Kupferkern mit Zubehör	LK	Iron carbonyl slugs and copper slugs with accessories	LK	Noyaux en fer carbonyle et en cuivre, avec accessoires
LL	Luftspule	LL	Air-core coils	LL	Bobines à air
LM	Magnetband und -platte	LM	Magnetic tapes and disks	LM	Bandes et disques magnétiques
LS	Schirmbecher	LS	Screening cans	LS	Boîtiers de blindage
LT	Netztransformator	LT	Power transformer	LT	Transformateur secteur
LU	NF-Übertrager	LU	AF transformer	LU	Transformateur BF
LV	Variometer	LV	Variometer	LV	Variomètre
LW	Wickelkörper, allgemein	LW	Coil formers, general	LW	Carcasses de bobine, en général

Teile-familie	Art des Bauelementes	Parts family	Type of component	Famille	Type d'élément
R	**Widerstände**	**R**	**Resistors**	**R**	**Résistances**
RD	Drahtwiderstand	RD	Wire-wound resistor	RD	Résistance bobinée
RF	Kohleschicht-Widerstand	RF	Carbon-film resistor	RF	Résistance à couche de carbone
RG	Metallglasur-Widerstand	RG	Metal-coated resistor	RG	Résistance à couche métallique
RJ	Metalloxyd-Widerstand	RJ	Metal-oxide resistor	RJ	Résistance à oxyde métallique
RK	Kaltleiter, Heißleiter, Varistor	RK	PTC, NTC resistors, varistors	RK	Résistances CPT, CNT, varistors
RL	Metallfilm-Widerstand	RL	Metal-film resistor	RL	Résistance à film métallique
RN	Widerstandsnetzwerk	RN	Resistor network	RN	Réseau de résistance
RR	Draht-Potentiometer	RR	Wire-wound potentiometer	RR	Potentiomètre bobiné
RS	Schicht-Potentiometer	RS	Carbon-film potentiometer	RS	Potentiomètre à couche
RT	Dämpfungsglied, Abschlußwiderstand	RT	Attenuator, termination	RT	Atténuateur, charge
RV	Drahtwiderstand mit Abgriff	RV	Wire-wound resistor, tapped	RV	Résistance bobinée à prise
RW	Wendelpotentiometer	RW	Helical potentiometer	RW	Potentiomètre hélicoidal
S	**Schalter, Relais, Sicherungen**	**S**	**Switches, relays, fuses**	**S**	**Commutateurs, relais, fusibles**
SB	Drucktastenschalter	SB	Pushbutton switch	SB	Commutateur à touche
SD	Drehschalter	SD	Rotary switch	SD	Commutateur rotatif
SF	Kontaktfedersatz	SF	Spring contact assembly	SF	Jeu de ressorts de contact
SH	HF-Koaxialschalter, -Relais, -Teiler	SH	Coaxial RF switch, RF relay, RF attenuator	SH	Commutateur RF coaxial, relais RF, atténuateur RF
SK	Kipp-, Wipp- und Schiebeschalter	SK	Toggle switch, slide switch	SK	Commutateur à bascule, à glissière
SL	Leistungsschalter Netz/HF	SL	AC supply switch, high-power RF switch	SL	Commutateur secteur, de puissance RF
SM	Mikroschalter	SM	Microswitch	SM	Microrupteur
SN	Elektromagnet, Relais	SN	Electromagnetic relay	SN	Relais électromagnétique
SP	Leistungsrelais, Luftschütz	SP	Power relay, air-type contactor	SP	Relais de puissance, contacteur à air
SR	Reedrelais	SR	Reed relay	SR	Relais reed
SS	Sicherung, Schutzschalter	SS	Fuse, automatic cut-out	SS	Fusible, coupe-circuit automatique
ST	Thermoschalter	ST	Thermal circuit breaker	ST	Disjoncteur thermique
SU	Überspannungs-Ableiter	SU	Arrester	SU	Eclateur
SW	Wechselrichter, Näherungsschalter	SW	Inverter (DC-AC), proximity switch	SW	Inverseur (DC-AC), commutateur de proximité
SZ	Zeitschalter	SZ	Time switch	SZ	Interrupteur horaire
V	**Verbindungselemente**	**V**	**Connecting elements**	**V**	**Eléments de raccordement**
VK	Klemme, Klemmleiste	VK	Clamp, terminal strip	VK	Pince, réglette à bornes
VL	Lötöse, Stützpunkt	VL	Soldering lug	VL	Cosse à souder
VS	Schraube, Mutter, Scheibe	VS	Screw, nut, washer	VS	Vis, écrou, disque

Farbcode für Widerstände und Kondensatoren

Anmerkung:
Die Wertangabe der weitgehend miniaturisierten Bauelemente erfolgt überwiegend durch Farbkennzeichnungen, deren Bedeutung der nachfolgenden Tabelle entnommen werden kann.

Hinweis:
Im Zuge des technischen Fortschrittes setzt R&S zunehmend Metallschichtwiderstände mit 1% Toleranz anstelle von Kohleschichtwiderständen mit 5% Toleranz ein. Metallschichtwiderstände können sich dabei an Stellen befinden, an denen gemäß Schaltteilliste Kohleschichtwiderstände vorgesehen sind. Etwaige geringfügige Differenzen der Nennwerte zwischen Stromlaufplan, Schaltteilliste und Gerät liegen im zulässigen Toleranzbereich.

Colour code for resistors and capacitors

Note:
The electrical values of the largely miniaturized components are mainly identified by a colour code, the meaning of which can be taken from the table below.

N. B.:
Following the state of the art R&S makes increasing use of metal-film resistors (1% tolerance) instead of carbon-film resistors (5% tolerance). Metal-film resistors may have been employed where carbon-film resistors are specified in the parts list. Any slight differences of nominal values between circuit diagram, parts list and equipment are within tolerance.

Code couleur pour résistances et condensateurs

Remarque:
Les valeurs électriques des composants fort miniaturisés sont indiquées dans la plupart des cas par un code couleur dont voici l'explication.

N. B.:
Suivant le progres technique R&S utilise de plus en plus des résistances à film métallique (tolérance 1%) au lieu des résistances à couche de carbone (tolérance 5%). Des résistances à film metallique peuvent se trouver en des points où des types à couche de carbone figurent dans la liste des composants. Les différences minimes des valeurs nominales existant eventuellement entre le schéma de circuit, la liste des composants et l'appareil sont dans la marge de tolérance.

Farbe/Colour/Couleur	A	B	C	D
Schwarz/Black/Noir	—	0		
Braun/Brown/Marron	1	1	0	± 1%
Rot/Red/Rouge	2	2	00	± 2%
Orange/Orangé	3	3	000	
Gelb/Yellow/Jaune	4	4	0000	
Grün/Green/Vert	5	5	00000	± 0,5%
Blau/Blue/Bleu	6	6	000000	
Violett/Violet	7	7	—	± 0,1%
Grau/Gray/Gris	8	8	—	
Weiß/White/Blanc	9	9	—	
Gold/Doré	—	—	—	± 5%
Silber/Silver/Argenté	—	—	—	± 10%
Ohne Farbe/No colour/ Pas de couleur	—	—	—	± 20%

Anordnungsbeispiele für / Examples for / Exemple pour

Widerstände (R) / Resistors (R) / Résistance (R)	Kondensat. (C) / Capacitors (C) / Condensateur (C)

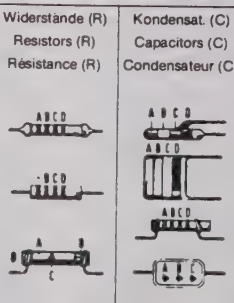

1) Toleranzring, hier nicht spezifiziert.
1) Tolerance ring, here not specified.
1) Anneau de tolérance, ne pas spécifié ici.

Definition* / Définition *

Kennzeichen A (Bauteilfarbe/1. Farbring) = 1. Zahl
Kennzeichen B (Bauteilende/2. Farbring) = 2. Zahl
Kennzeichen C (Punkt/3. Farbring) = 3. Zahl = Zahl der Nullen
Kennzeichen D (Punkt/4. Farbring) = Toleranz des Nennwerts in %
(Fehlendes Kennzeichen fur D bedeutet ±20%)

Das Fehlen eines Kennzeichens bedeutet, daß die Farbe des Bauteilkorpers die Wertangabe darstellt.

Marking A (body colour or first coloured ring) = 1st digit
Marking B (body end or second coloured ring) = 2nd digit
Marking C (dot or third coloured ring) = number of zeroes
Marking D (dot or fourth coloured ring) = tolerance on nominal value in %
(with no D marking tolerance ± 20%)

The absence of a marking signifies that the body colour gives the corresponding information

Repérage A (couleur du corps ou 1er anneau) = 1er chiffre
Repérage B (bout du corps ou 2e anneau) = 2e chiffre
Repérage C (point ou 3e anneau) = nombre de zéros.
Repérage D (point ou 4e anneau) = tolérance en % de la valeur nominale
(L'absence du reperage D signifie ± 20%)

L'absence de tout repérage signifie que la couleur du corps du composant represente la valeur correspondante.

* Siehe auch DIN 41 429 und DIN 40 825
* see also IEC publication 62-1952 and 62-1968
* Voir aussi DIN 41 429 et DIN 40 825

Kennz. Comp.No.	Benennung Designation	Sachnummer Stock No.	Hersteller Manufacturer	Bezeichnung Designation	enthalten in contained in
A2	ZE D-POWER SUPPLY POWER SUPPLY HIERZU STROML.805.8013S SEE CIRC.DIAGR.805.8013S	805.8013.02			804.9516.01
A11	ZM FRONTPLATTENEINH.DISPL FRONT PANEL UNIT HIERZU STROML. 804.9916 S SEE CIRC.DIAGR.804.9916 S	804.9916.02			804.9516.01
A12	ED MOTHERBOARD MOTHERBOARD HIERZU STROML. 806.0516 S SEE CIRC.DIAGR.806.0516 S	806.0516.02			804.9516.01
A13	ZM RUECKWAND REAR PANEL	805.9510.02			804.8032.01
A15	EE SUB-MOTHERBOARD SUB MOTHERBOARD HIERZU STROML.806.0516S SEE CIRC.DIAGR.806.0516S	806.0916.02			804.9516.01
A31	EE IF-FILTER 1 IF FILTER 1 HIERZU STROML.805.5337 S SEE CIRC.DIAGR.805.5337 S	805.5337.02			804.9516.01
A32	EE IF-FILTER 2 IF FILTER 2 HIERZU STROML. 805.4318 S SEE CIRC.DIAGR.805.4318 S	805.4318.02			804.9516.01
A33	EE STEP GAIN STEP GAIN HIERZU STROML. 805.3311 S SEE CIRC.DIAGR.805.3311 S	805.3311.02			804.9516.01
A34	EE LIN/LOG LIN/LOG HIERZU STROML. 805.2315 S SEE CIRC.DIAGR.805.2315 S	805.2315.02			804.9516.01
A35	EE IF-COUNTER IF COUNTER HIERZU STROML. 806.0016 S SEE CIRC.DIAGR.806.0016 S	806.0016.02			804.9516.01
A36	EE AF-UNIT AF UNIT HIERZU STROML. 809.8518 S SEE CIRC.DIAGR.809.8518 S	809.8518.02			804.9516.01
A37	EE A/D CONVERTER A/D CONVERTER HIERZU STROML. 805.1319 S SEE CIRC.DIAGR.805.1319 S	805.1319.02			804.9516.01
A39	ED EMI-DETECTOR EMII-DETECTOR NUR VAR/ONLY MOD: 04 HIERZU STROML.1004.7006/S SEE CIRC.DIAG.1004.7006/S	1004.7006.02			804.8032.01
A41	EE MAIN PROCESSOR MAIN PROCESSOR HIERZU STROML. 805.0012 S SEE CIRC.DIAGR.805.0012 S	810.2010.02			804.9516.01
A43	EE GRAPHICS GRAPHICS HIERZU STROML. 805.0712S SEE CIRC.DIAGR.805.0712S	805.0712.02			804.9516.01
A45	EE I/O BOARD I/O BOARD HIERZU STROML. 805.0812 S SEE CIRC.DIAGR.805.0812 S	805.0812.02			804.9516.01
A51	ED MONITOR MONITOR HIERZU STROML. 805.7317 S SEE CIRC.DIAGR.805.7317 S	805.7317.02			804.9516.01
A52	EE VIDEO BOARD VIDEO BOARD HIERZU STROML. 805.7817 S SEE CIRC.DIAGR.805.7817 S	805.7817.02			804.9516.01
A53	EE SOCKET-BOARD SOCKET BOARD	805.7017.02			804.9516.01
A92	EE PHASE NUR VAR/ONLY MOD: 03 HIERZU STROML.810.0017S SEE CIRC.DIAGR.810.0017S	810.0017.02			804.8032.01

Für diese Unterlage behalten wir uns alle Rechte vor

Kennz. Comp.No.	Benennung Designation	Sachnummer Stock No.	Hersteller Manufacturer	Bezeichnung Designation	enthalten in contained in
B1	EL LAUTSPRECHER 0,5W150HM LOUDSPEAKER	243.1298	VALVO	2070Z15242225723803	804.9516.01
C2	CC 10 NF+-10%100V5K1200LR CAPACITOR	092.0654	AEROVOX	CKR05BX103KLEVELR	805.9510.01
C3	CC 10 NF+-10%100V5K1200LR CAPACITOR	092.0654	AEROVOX	CKR05BX103KLEVELR	805.9510.01
D1	BC 27C256-25Z 32KX8 EPROM EPROM	BC 651.6701	FUIJTSU	MBM27C256-25Z	810.2932
D2	BC 27C256-25Z 32KX8 EPROM EPROM	BC 651.6701	FUIJTSU	MBM27C256-25Z	810.2932
D3	BC 27C256-25Z 32KX8 EPROM EPROM	BC 651.6701	FUIJTSU	MBM27C256-25Z	810.2926
D4	BC 27C256-25Z 32KX8 EPROM EPROM	BC 651.6701	FUIJTSU	MBM27C256-25Z	810.2926
D60	BC 27C512-25Z 64KX8 EPROM EPROM	BC 007.6991	FUJITSU	MBM27C512-25Z	810.2126
D61	BC 27C512-25Z 64KX8 EPROM EPROM	BC 007.6991	FUJITSU	MBM27C512-25Z	810.2126
D80 ..85	BC 27C512-25Z 64KX8 EPROM EPROM	BC 007.6991	FUJITSU	MBM27C512-25Z	810.2126
E2	EV 18V-28V 45L/SEC 5W MOTOR	EV 531.7130	PAPST	4124X	805.9510.01
L531	LD ENTMAGNETISIER.-SPULE DEGAUSSING COIL	805.7117.02			806.2090.01
R200	RJ 4W 390 OHM+-10% TK400 METALLIC OXIDE RESITOR	805.7446	RESISTA	WK8 3900HM 10% 10%	805.8007.01
V530	ZM COLOUR DISPLAY TUBE COLOUR DISPLAY TUBE	805.8007.02			806.2090.01
W133	DX KABEL W133 CABLE W133	806.1712			805.9561
W134	DX KABEL W134 CABLE W134	806.1729			805.9561
W135	DX KABEL W135 CABLE W135	806.1735			805.9561
W136	DX KABEL W136 CABLE W136	806.1741			805.9561
W137	DX KABEL W137 CABLE W137	806.1758			805.9561
W138	DX KABEL W138 CABLE W138	806.1764			805.9561
W139	DX KABEL W139 CABLE W139	806.1770			805.9561
W140	DX KABEL W140 CABLE W140	806.1787			805.9561
W141	DX KABEL W141 CABLE W141	806.1793			805.9561
W144	DX FLACHBANDKABEL W144	806.1606			805.9561
W145	DX HF-KABEL W145	806.1664			805.9561
W146	DX HF-KABEL W146	806.1629			805.9561
W147	DX HF-KABEL W147	806.1658			805.9561
W148	DX HF-KABEL W148	806.1635			808.7024
W149	DX HF-KABEL W149	806.1641			808.7024
W150	DX HF-KABEL W150 RF CABLE W150	806.1512			804.9516.01
W151	DX HF-KABEL W151 RF CABLE W151	806.1529			804.9516.01
W153	DX HF-KABEL W153 RF CABLE W153	806.1535			804.9516.01
W154	DX HF-KABEL W154 RF CABLE W154	806.1541			804.9516.01
W155	DX HF-KABEL W155 RF CABLE W155	806.1558			804.9516.01
W156	DX HF-KABEL W156 RF CABLE W156	806.1564			804.9516.01
W157	DX HF-KABEL W157 RF CABLE W157	806.1570			804.9516.01
W158	DX HF-KABEL W158 NUR VAR/ONLY MOD: 04	806.1587			804.8032.01
W159	DX HF-KABEL W159	806.1593			808.7024
W170	DX KABEL W170 CABLE W170	806.1670			804.9516.01

Kennz. Comp.No.	Benennung Designation	Sachnummer Stock No.	Hersteller Manufacturer	Bezeichnung Designation	enthalten in contained in
W175	DX HF-KABEL W175 RF CABLE W175	806.1812			805.9561
W213	DX LUEFTERKABEL CABLE FOR FAN	806.1687			805.9561
W533	DX MASSEKABEL W533 GND CABLE W533	805.7123			806.2090.01
X3	FT KLINKENEINBAUBUCHSE 3P JACKET	FT 516.8175	CRAFT	BEST.BEZ.12B	805.9510.01
X4 ..11	FJ EINBAUBUCHSE SYST.BNC BNC-CONNECTOR UG 625CIU	FJ 099.9186	ROSENBERG.	51K-503-200-P4	805.9510.01
X12	ENTHALTEN IN/INCLUDED IN W175				805.9510.01
X132	DX BUCHSENEINHEIT X132 SOCKET UNIT	806.1612			805.9561
X230	FP KUPPLUNGSGEHAEUSE 3POL CONNECTOR 3P	520.5831	AMP	350766-1	805.8007.01
X240	FP BUCHSENGEHAEUSE 4POL. SOCKET CASE	343.4930	AMP	1-480424-0	805.8007.01
					- ENDE -

Für diese Unterlage behalten wir uns alle Rechte vor

Kennz. Comp.No.	Benennung Designation	Sachnummer Stock No.	Hersteller Manufacturer	Bezeichnung Designation	enthalten in contained in
X14	FP STECKERLEISTE 32POL. MULTIPOINT CONNECTOR	FP 565.8100	PANDUIT	100-332-033/999	
X31	FP IND.BUCHSENLEISTE 64P FEMALE MULTIPOINT CONNECT	FP 272.9112	PANDUIT	100-964-433/999	
X32	FP IND.BUCHSENLEISTE 64P FEMALE MULTIPOINT CONNECT	FP 272.9112	PANDUIT	100-964-433/999	
X33	FP IND.BUCHSENLEISTE 64P FEMALE MULTIPOINT CONNECT	FP 272.9112	PANDUIT	100-964-433/999	
X34	FP IND.BUCHSENLEISTE 64P FEMALE MULTIPOINT CONNECT	FP 272.9112	PANDUIT	100-964-433/999	
X37	FP IND.BUCHSENLEISTE 96P FEMALE MULTIPOINT CONNECT	FP 272.9129	PANDUIT	100-096-433/999	
X41 ..47	FP IND.BUCHSENLEISTE 96P FEMALE MULTIPOINT CONNECT	FP 272.9129	PANDUIT	100-096-433/999	
X52	FP BUCHSENLEISTE 32POL. 32-SOCKET INSERT	FP 099.0937	PANDUIT	100-332-433/999	
X92	FP IND.BUCHSENLEISTE 64P FEMALE MULTIPOINT CONNECT	FP 272.9112	PANDUIT	100-964-433/999	
X111	STECKER 26 POL.GEW.	806.0600			
X112	STECKER 6 POL.GER.	806.0622			
X132	STECKER 16 POL.GEW.	806.0639			
X133	STECKER 40 POL.GER.	806.0616			
X134	STECKER 40 POL.GER.	806.0651			
X135	STECKER 26 POL.GER.	806.0645			
X136	STECKER 26 POL.GER.	806.0668			
X137	STECKER 26 POL.GER.	806.0668			
X138	STECKER 14 POL.GEW.	806.0697			
X139	STECKER 10 POL.GEW.	806.0580			
X140	STECKER 34 POL.GER.	806.0680			
X141	STECKER 6 POL.GER.	806.0622			
X142	FP STECKER 9-POL.GEW.	806.0722			
X211	DX VERBINDUNGSEINH. X211	805.8613			
X212	DX BUCHSENEINHEIT 26POL.	805.8620			
X213	STECKER 4 POL.GEW.	806.0674			
X221	DX VERBINDUNGSEINH. X221	805.8913			
X222	DX BUCHSENEINHEIT 20POL.	805.8920			
X511	FP EINLOETSTECKER 6POL CONNECTOR 6POL	681.1172	AMP	350711-1	
X512	STECKER 10 POL.GEW.	806.0580			
X531	FP EINLOETSTECKER 2POL CONNECTOR 2POL	681.1195	AMP	350786-1	
					- ENDE -

Für diese Unterlage behalten wir uns alle Rechte vor

ROHDE&SCHWARZ	ÄZ	Datum Date	Schaltteiliste für Parts list for	Sachnummer Stock Nr.	Blatt Page
	04	0587	EE SUB-MOTHERBOARD	806.0916.01 SA	1

Kennzeichen Component No.	Benennung/Beschreibung Designation	Sachnummer Stock No.	enthalten in contained in
.	ZUGEH.STROML./CIRC.DIAGR. 806.0916 S		
X15	FP BUCHSENLEISTE 32P.KURZ CONNECTOR PANDUIT 100-332-533/999	FP 352.7321	
X35	FP BUCHSENLEISTE 32POL. 32-SOCKET INSERT PANDUIT 100-332-433/999	FP 099.0937	
X36	FP BUCHSENLEISTE 32POL. 32-SOCKET INSERT PANDUIT 100-332-433/999	FP 099.0937	
X99	FP BUCHSENLEISTE 32POL. 32-SOCKET INSERT PANDUIT 100-332-433/999	FP 099.0937	
X170	FP WINKELSTECKERLEIST.36P ANGLE PIN CONNECTOR BERG 75168-113-36 3KONT.	FP 243.3578	
X171	FP WINKELSTECKERLEIST.36P ANGLE PIN CONNECTOR BERG 75168-113-36 4KONT.	FP 243.3578	
			- ENDE -

Für diese Unterlage behalten wir uns alle Rechte vor

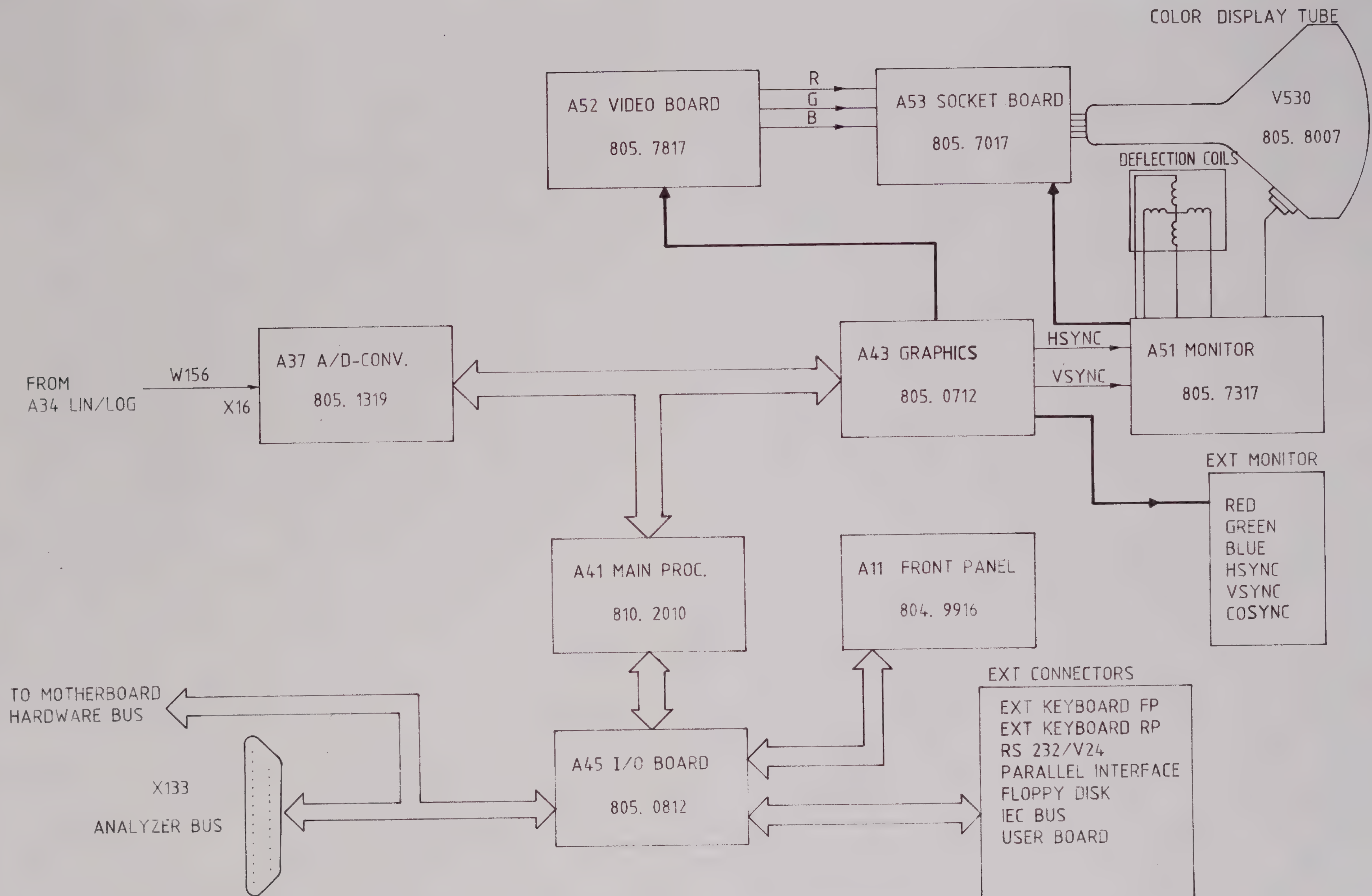

SCHEMATIC INTERCONNECTION

ROHDE & SCHWARZ

1KGF	Tag	Name
Bearb.	01.87	HW
Gepr		
Norm		

Benennung: DISPLAY UNIT

zu Gerat: FSA

Zeichn.-Nr.: 804. 8110 FS

reg i V: 804. 8010 V

erste Z: 804. 8010

Blatt-Nr: 1

And Zust | Änderungs-Mitteilung | Datum | Name | And Zust | Änderungs-Mitteilung | Datum | Name

Für diese Unterlage behalten wir uns alle Rechte vor

07 6001 81

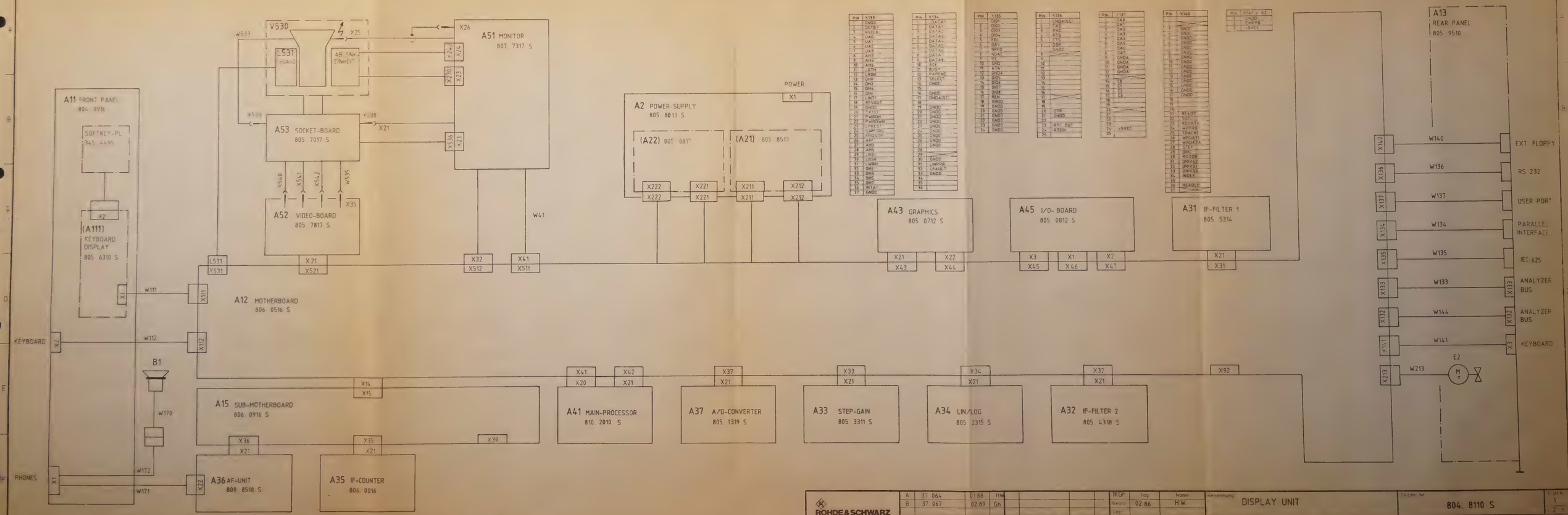

A11 FRONT PANEL
804 9916
SOFTKEY-PL
345 4495
(A111)
KEYBOARD
DISPLAY
805 6310 S
V530
L531
ABLENK EINHEIT
A51 MONITOR
807 7317 S
A53 SOCKET-BOARD
805 7017 S
A52 VIDEO-BOARD
805 7817 S
A2 POWER-SUPPLY
805 8013 S
(A22) 805 8817
(A21) 805 8513
POWER
A43 GRAPHICS
805 0712 S
A45 I/O-BOARD
805 0812 S
A31 IF-FILTER 1
805 5314
A13
REAR PANEL
805 9510
EXT FLOPPY
RS 232
USER PORT
PARALLEL INTERFACE
IEC 625
ANALYZER BUS
ANALYZER BUS
KEYBOARD
A12 MOTHERBOARD
806 0516 S
KEYBOARD
B1
A15 SUB-MOTHERBOARD
806 0916 S
A41 MAIN-PROCESSOR
810 2010 S
A37 A/D-CONVERTER
805 1319 S
A33 STEP-GAIN
805 3311 S
A34 LIN/LOG
805 2315 S
A32 IF-FILTER 2
805 4318 S
PHONES
A36 AF-UNIT
809 8518 S
A35 IF-COUNTER
806 0016
E2
ROHDE&SCHWARZ
A 37 064 01.88 HW
B 37 067 02.89 Gh
IKGF Tag Name
02.86 H.W.
DISPLAY UNIT
804. 8110 S
804.8010 V

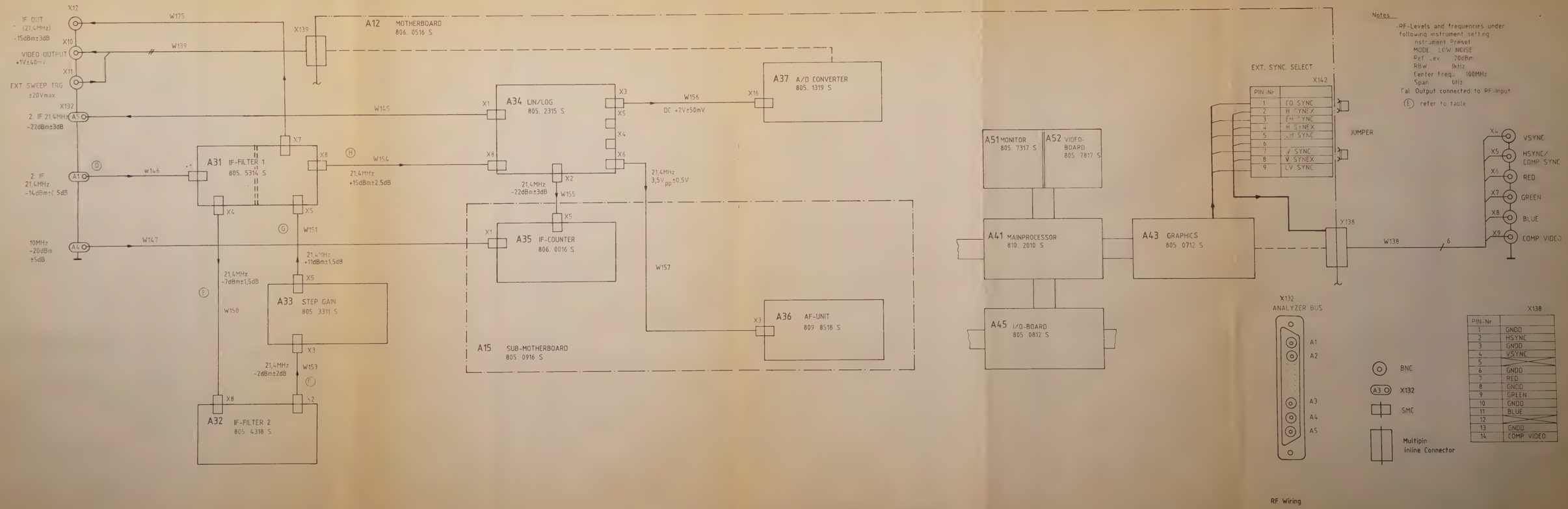

ROHDE&SCHWARZ	A	37 064	01.88	Gh					1KGF	Tag	Name	Benennung	DISPLAY UNIT	Zeichn Nr	804. 8110 S	Blatt Nr 2
									Bearb	01.86	H W					
									Gepr							
									Norm				zu Gerät FSA	reg i V 804. 8010 V	erste Z 804. 8010	

+12V	X52A	3	X511	3	X222	14							
+15V	014	1	X92C	7	X14A	3	X32C	7	015	1	X37C	7	X92A	7
			X34A	7	X34C	7	X33C	7	X47B	2	X32A	7	X33A	7
			X31A	7	X37B	7	X31C	7	X37A	7				
+5V	01	1	X32C	31	X33A	31	X31A	31	X46C	32	X31C	31	X46B	32
			X37C	32	X34C	31	X14A	15	X34A	31	X32A	31	X33C	31
			X41A	32	X41B	32	X41C	32	X37A	32	X37B	32	X14C	15
			X43B	32	X111	4	X47B	32	X43C	32	X111	3	X47C	32
			X42A	32	04	1	X42B	32	X43A	32	X42C	32	X47A	32
			X92A	31	X46A	32	X92C	31						
+5V*	02	1	X33A	3	X33C	3	X34A	3	X34C	3	X32A	3	X32C	3
			X31A	3	X31C	3	X92A	3	X92C	3				
+5VCC	X112	5	X137	24	X212	18	X141	5						
+85V	03	1	X511	5	X52C	8	X52A	8						
-15V	012	1	X47A	2	X32C	9	X14C	3	X37B	9	X31A	9	X37A	9
			X34A	9	X33C	9	X34C	9	X33A	9	X32A	9	X37C	9
			X31C	9	X52C	3	X92A	9	019	1	X92C	9		
-5V	X31A	5	X34A	5	X33C	5	X33A	5	X222	12	X37C	5	X37B	5
			X32C	5	X31C	5	X32A	5	X92A	5	X34C	5	X92C	5
			X37A	5										
ACK	X45C	9	X134	10										
AF	X14C	1	X37C	14										
AH1	X14C	6	X34C	20	X33C	20	X32C	20	X47B	19	X31C	20	X133	26
			X92C	20										
AH2	X14A	6	X32A	21	X34A	21	X31A	21	X33A	21	X92A	21	X47A	20
			X133	8										
AH3	X14C	7	X34C	21	X33C	21	X32C	21	X47B	20	X31C	21	X133	27
			X92C	21										
AH4			X32A	22	X34A	22	X31A	22	X33A	22	X92A	22	X47A	21
			X133	9										
AH5	X31C	22	X32C	22	X92C	22	X34C	22	X33C	22	X47B	21	X133	28
AH6	X31A	23	X32A	23	X92A	23	X34A	23	X33A	23	X47A	22	X133	10
AH7	X31C	23	X32C	23	X92C	23	X34C	23	X33C	23	X47B	22		
AH8	X31A	24	X32A	24	X92A	24	X34A	24	X33A	24	X47A	23		
ATN	X45B	12	X135	11										
BEEP	X14A	9	X46C	29										
BLANK	X44B	13	X52C	2	X44C	13								
BLUE	X44A	14	X52C	5										
BRIGHT	X47B	4	X512	5										
BUSY	X45A	8	X134	11										
C0	X45A	22	X137	14										
C1	X45B	22	X137	15										
C2	X45C	22	X137	16										
C3	X45A	21	X137	17										

Für diese Unterlage behalten wir uns alle Rechte vor

C		11.86	H W	1KGF	Tag	Name	Benennung	
				Bearb	12.85	H.W.	ED MOTHERBOARD	Z
				Gepr				
				Norm				
				ROHDE&SCHWARZ			Zeichn.-Nr 806. 0516 S	Blatt Nr 1
And Zust	Anderungs-Mitteilung	Tag	Name	zu Gerat FSA			reg i V 804. 9516 V erste Z 804. 9516	v 8 Bl

COMVID	X44A	29	X138	14									
COSYNC	X44A	11	X142	1									
CTS	X45B	19	X136	5									
DEVADJ	X14A	7	X47A	6									
DA0	X45A	25	X137	1									
DA1	X45B	25	X137	2									
DA2	X45A	24	X137	3									
DA3	X45B	24	X137	4									
DA4	X45C	24	X137	5									
DA5	X45A	23	X137	6									
DA6	X45B	23	X137	7									
DA7	X45C	23	X137	8									
DATA1	X45A	11	X134	2									
DATA2	X45B	11	X134	3									
DATA3	X45C	11	X134	4									
DATA4	X45A	10	X134	5									
DATA5	X45B	10	X134	6									
DATA6	X45C	10	X134	7									
DATA7	X45A	9	X134	8									
DATA8	X45B	9	X134	9									
DAV	X45C	14	X135	6									
DEGAU1	06	1	X531	1									
DEGAU2	08	1	X531	2									
DH0	X14C	11	X34C	25	X33C	25	X32C	25	X47B	27	X31C	25	X133 13
			X92C	25									
DH1	X14A	11	X34A	26	X33A	26	X32A	26	X47A	28	X31A	26	X133 32
			X92A	26									
DH2	X14C	12	X34C	26	X33C	26	X32C	26	X47B	28	X31C	26	X133 14
			X92C	26									
DH3	X14A	12	X34A	27	X33A	27	X32A	27	X47A	29	X31A	27	X133 33
			X92A	27									
DH4	X14C	13	X34C	27	X33C	27	X32C	27	X47B	29	X31C	27	X133 15
			X92C	27									
DH5	X14A	13	X34A	28	X33A	28	X32A	28	X47A	30	X31A	28	X133 34
			X92A	28									
DH6	X14C	14	X34C	28	X33C	28	X32C	28	X47B	30	X31C	28	X133 16
			X92C	28									
DH7	X14A	14	X34A	29	X33A	29	X32A	29	X47A	31	X31A	29	X133 35
			X92A	29									
DIO1	X45C	17	X135	1									
DIO2	X45B	16	X135	2									
DIO3	X45A	15	X135	3									
DIO4	X45C	15	X135	4									
DIO5	X45B	17	X135	13									
DIO6	X45A	16	X135	14									
DIO7	X45C	16	X135	15									
DIO8	X45B	15	X135	16									
DIRC	X45A	4	X140	29									
DISPON	X46C	26	X512	7									
DRIVS0	X45C	6	X140	33									
DRIVS1	X45A	5	X140	32									
DRIVS2	X45B	5	X140	31									
DSR	X45A	19	X136	6									
DSTBY	X133	2	X212	19									
DTR	X45B	20	X136	20									

Für diese Unterlage behalten wir uns alle Rechte vor

C		11.86	HW	1KGF	Tag	Name	Benennung	
				Bearb	12.85	H.W.	ED MOTHERBOARD	Z
				Gepr				
				Norm				
And Zust	Anderungs-Mitteilung	Tag	Name	ROHDE&SCHWARZ			Zeichn.-Nr 806. 0516 S	Blatt Nr 2 v 8 Bl
				zu Gerat FSA			reg. v. 804. 9516 V	erste Z 804. 9516

EBLUE	X44A	2	X138	11											
EGREEN	X44A	5	X138	9											
EHSYNC	X44B	24	X44C	24	X142	3									
EOI	X45B	14	X135	5											
ERED	X44A	8	X138	7											
EVSYNC	X44B	27	X142	7	X44C	27									
EXKYB	X47C	2	X112	4	X141	4									
EXTRIG	X37C	2	X139	6											
FAN+	X213	4	X222	18											
FAN-	X213	2	X222	17											
FANCON	X212	3	X222	3											
FRQSTP	X37A	22	X133	25											
GALE	X41A	19	X43A	19											
GA1	X41B	3	X43C	3	X43B	3									
GA2	X41A	4	X43A	4											
GA3	X41B	4	X43C	4	X43B	4									
GA4	X41A	5	X43A	5											
GA5	X41B	5	X43C	5	X43B	5									
GA6	X41A	6	X43A	6											
GA7	X41B	6	X43C	6	X43B	6									
GDAT0	X37A	23	X41A	23	X43A	23									
GDAT1	X37B	23	X41B	23	X43C	23	X43B	23							
GDAT2	X37A	24	X41A	24	X43A	24									
GDAT3	X37B	24	X41B	24	X43C	24	X43B	24							
GDAT4	X37A	25	X41A	25	X43A	25									
GDAT5	X37B	25	X41B	25	X43C	25	X43B	25							
GDAT6	X37A	26	X41A	26	X43A	26									
GDAT7	X37B	26	X41B	26	X43C	26	X43B	26							
GDAT8	X37A	27	X41A	27											
GDAT9	X37B	27	X41B	27											
GDAT10	X37A	28	X41A	28											
GDAT11	X37B	28	X41B	28											
GDAT12	X37A	29	X41A	29											
GDAT13	X37B	29	X41B	29											
GDAT14	X37A	30	X41A	30											
GDAT15	X37B	30	X41B	30											
GDRQ0	X37B	17	X41B	17											
GDT	X41B	15	X43C	15	X43B	15									
GNDA	P1	1	X134	17	X92C	10	X92C	6	X92A	4	X135	12	X137	12	
			X139	7	X37B	3	07	1	X33A	10	X37B	4	X46C	25	
			X31A	8	X14A	1	X92C	8	X92A	10	X92A	6	X31A	10	
			X32A	10	X31C	8	X31A	6	X32A	17	X31C	10	X92A	8	
			X32C	8	X32A	6	X31C	4	X32C	10	X32A	8	X31C	6	
			X32D	1	X32A	1	X34C	4	X32A	2	X32D	3	X32C	1	
			X33A	4	X33C	8	X33A	2	X33C	10	X33D	1	X33A	1	
			X33A	8	X37B	8	X33A	6	X37A	8	X37C	8	X33C	6	
			X33C	4	X34A	2	X34D	3	X34C	1	X34A	4	X34C	2	
			X33D	3	X47B	7	X33C	1	X33C	2	X34D	1	X34A	1	
			X34A	6	X34C	8	X32C	4	X31A	2	X31D	3	X31C	1	
			X34A	8	X34C	10	X32C	6	X31A	4	X31C	2	X34A	10	
			X34C	6	X32A	4	X132	1	X32C	2	X31D	1	X31A	1	
			X92A	2	X92C	4	X136	1	X137	11	X92D	1	X92A	1	
			X212	11	X222	13	011	1	X222	6	X139	1	X139	5	
			X137	10	X92D	3	X92C	1	X137	9	X92C	2			

Für diese Unterlage behalten wir uns alle Rechte vor

C		11.86	HW	1KGF	Tag	Name	Benennung	
				Bearb	12.85	H.W.	ED MOTHERBOARD	Z
				Gepr				
				Norm				
				ROHDE&SCHWARZ			Zeichn.-Nr 806. 0516 S	Blatt Nr 3 v 8 Bl
And Zust	Anderungs-Mitteilung	Tag	Name	zu Gerat FSA			reg. V 804. 9516 V	erste Z 804. 9516

GNDD	P2	1	X111	25	X45B	1	X45A	32	X45D	2	X133	19	X42A	1
			X133	37	X133	1	X42B	1	X42D	2	X134	19	X47A	1
			X134	22	X140	14	X134	23	X140	13	X134	24	X140	12
			X134	25	X140	11	X134	26	X140	10	X134	27	X140	9
			X134	30	X140	8	X134	33	X140	7	X134	14	X134	16
			X135	18	X140	6	X136	7	X135	19	X140	5	X136	21
			X135	20	X140	4	X135	21	X140	3	X135	22	X141	6
			X138	13	X44A	9	X32A	32	X512	2	X44A	7	X32C	32
			X33A	32	X46D	2	X37A	1	X52A	6	X52C	4	X138	6
			X37B	1	X52C	6	X138	8	X37D	2	X44A	12	X34A	32
			X37C	1	X138	10	X37D	3	X44A	10	X34C	32	05	1
			X42D	1	X111	26	X45A	1	X45C	1	X45D	3	X45D	1
			X43B	1	X44A	32	X52A	16	X43D	2	X511	6	X44A	21
			X44A	18	X44A	27	X41B	1	X44C	30	X52A	1	X138	1
			X44A	24	X222	1	X43C	1	X44A	30	X44B	32	X52C	16
			X44A	28	X44C	32	X52C	1	X52A	12	X52C	14	X41D	1
			X44D	1	X92C	32	X112	6	X45C	32	X14A	16	X44B	1
			X44D	2	X111	1	X45B	32	X44C	1	X44D	3	X111	2
			X47D	1	X140	17	X42C	1	X42D	3	X134	20	X47B	1
			X47D	2	X140	16	X134	21	X47C	1	X47D	3	X140	15
			X512	4	X44A	6	X31A	32	X512	8	X44A	4	X31C	32
			X512	10	X44A	3	X92A	32	X112	1	X14C	16	X44A	1
			X52A	4	X138	3	X52C	10	X41D	3	X44A	15	X46B	1
			X52A	10	X37D	1	X44A	13	X46C	1	X33C	32	X46D	3
			X52A	14	X43D	3	X44A	19	X44A	25	X41A	1	X44B	30
			X52C	12	X41D	2	X44A	16	X46A	1	X46D	1	X41C	1
			09	1	X43A	1	X43D	1	X511	4	X44A	22	X212	1
			X135	23	X141	1	X135	24						
GREEN	X44A	17	X52C	11										
GTOUT0	X41C	30	X46C	30										
HEADLD	X45A	6	X140	36										
HSYNC	X44A	23	X512	9										
HSYNEX	X138	2	X142	4	X142	2								
IFC	X45C	13	X135	9										
INDEX	X45B	6	X140	34										
INTA1	X47B	18	X133	36										
LGDRQ1	X41A	18	X43A	18										
LBS0	X47A	8	X133	30										
LBS1	X47B	8	X133	29										
LBSAF	X14A	8	X47A	11										
LBSCIS	X14C	8	X47B	11										
LBSCTR	X14C	4	X47B	10										
LBSFI1	X31C	18	X47B	12										
LBSFI2	X32C	18	X47A	9										
LBSLIN	X34C	18	X47A	10										
LBSPHA	X47A	12	X92C	18										
LBSSG	X33C	18	X47B	9										
LDATA5	X45C	12	X134	1										
LDTH	X14A	4	X32A	19	X34A	19	X31A	19	X33A	19	X92A	19	X47C	27
			X133	11										
LEA21	X47C	7	X212	14										
LEA22	X47C	4	X222	7										

Für diese Unterlage behalten wir uns alle Rechte vor

C		11.86	HW	1KGF	Tag	Name	Benennung	
				Bearb	12.85	H.W.	ED MOTHERBOARD	Z
				Gepr				
				Norm				
And Zust	Anderungs-Mitteilung	Tag	Name	ROHDE&SCHWARZ			Zeichn.-Nr 806. 0516 S	Blatt-Nr 4 v 8 Bl
				zu Gerat FSA			reg. V 804. 9516 V	erste Z 804. 9516

LEFAN	X47C	6	X222	9									
LETEMP	X47C	5	X222	8									
LFAULT	X45B	7	X134	32									
LGDEN	X41B	21	X43C	21	X43B	21							
LGPCS0	X41A	11	X43A	11									
LGPCS1	X41B	11	X43C	11	X43B	11							
LGPCS2	X41A	12	X47A	3									
LGPCS4	X37B	14	X41B	14									
LGPCS5	X37A	15	X41A	15									
LGPCS6	X37C	11	X41C	11									
LGRD	X41B	13	X43C	13	X43B	13							
LGWR	X37A	14	X41A	14	X43A	14							
LHSYNC	X44B	23	X44C	23	X142	5							
LINET	X37C	4	X212	23									
LINPPR	X45A	7	X134	31									
LINT1	X47A	19	X133	17									
LIR1	X42C	3	X46C	3	X14A	5							
			X32A	20	X34A	20	X31A	20	X33A	20	X92A	20	
LIR7	X14C	5	X32C	19	X34C	19	X31C	19	X33C	19	X92C	19	X47B 3
LMDEN	X42B	21	X46B	21									
LMDRQ0	X42B	17	X46B	17									
LMDRQ1	X42A	18	X46A	18									
LMINA0	X42A	20	X46A	20									
LMINA1	X42B	19	X46B	19									
LMINT0	X42A	21	X46A	21									
LMINT1	X42B	20	X46B	20									
LMPCS2	X42A	12	X46A	12									
LMPCS3	X41B	19	X42B	12									
LMPCS4	X42B	14	X46B	14									
LMRD	X42B	13	X46B	13									
LMWR	X42A	14	X46A	14									
LPREST	X133	23	X212	22									
LPWRE1	X43C	27	X212	12									
LPWRE2	X41C	26	X43C	28									
LPWRE3	X37C	26	X41C	27									
LPWRE4	X37C	27	X46C	24									
LRDH	X14C	10	X34C	24	X33C	24	X32C	24	X47B	26	X31C	24	X133 12
			X92C	24									
LRESIN	X41A	17	X212	13									
LVSYNC	X44A	26	X142	9									
LWRH	X14A	10	X34A	25	X33A	25	X32A	25	X47A	27	X31A	25	X133 31
			X92A	25									
MA0	X42A	3	X46A	3									
MA1	X42B	3	X46B	3									
MA2	X42A	4	X46A	4									
MA3	X42B	4	X46B	4									
MA4	X42A	5	X46A	5									
MA5	X42B	5	X46B	5									
MA6	X42A	6	X46A	6									
MA7	X42B	6	X46B	6									
MA8	X42A	7	X46A	7									
MA9	X42B	7	X46B	7									
MA10	X42A	8	X46A	8									

Für diese Unterlage behalten wir uns alle Rechte vor

C		11.86	HW	1KGF	Tag	Name	Benennung	
				Bearb.	12.85	H.W.	ED MOTHERBOARD	Z
				Gepr				
				Norm				
							Zeichn.-Nr	Blatt-Nr
				ROHDE&SCHWARZ			806. 0516 S	5 v 8 Bl
And Zust	Anderungs-Mitteilung	Tag	Name	zu Gerat	FSA		reg. i V 804. 9516 V	erste Z 804. 9516

MA11	X42B	8	X46B	8					
MA12	X42A	9	X46A	9					
MA13	X42B	9	X46B	9					
MA14	X42A	10	X46A	10					
MA15	X42B	10	X46B	10					
MALE	X42A	17	X46A	17					
MCLK	X42B	22	X46B	22					
MDAT0	X42A	23	X46A	23					
MDAT1	X42B	23	X46B	23					
MDAT2	X42A	24	X46A	24					
MDAT3	X42B	24	X46B	24					
MDAT4	X42A	25	X46A	25					
MDAT5	X42B	25	X46B	25					
MDAT6	X42A	26	X46A	26					
MDAT7	X42B	26	X46B	26					
MDT	X42B	15	X46B	15					
MEMORY	X42A	19	X46A	19					
MOTON	X45C	5	X140	30					
MSRDY	X42C	13	X46C	13					
MTOUT1	X42C	30	X46C	31					
NDAC	X45B	13	X135	8					
NRFD	X45A	13	X135	7					
NSCLK	X47C	16	X133	3					
OA0	X45A	26	X111	22					
OA1	X45B	26	X111	21					
OA2	X45C	26	X111	24					
OA3	X45C	25	X111	23					
OB0	X45C	28	X111	18					
OB1	X45A	27	X111	17					
OB2	X45B	27	X111	20					
PAPEND	X45B	8	X134	12					
PHASE	X37C	20	X92A	13					
PWRDWN	X133	22	X212	2					
PWRON	X212	20	X222	20					
RDDATA	X45A	2	X140	23					
READY	X45C	2	X140	21					
RED	X44A	20	X52C	13					
REN	X45A	14	X135	17					
RESOUT	X31C	29	X32C	29	X92C	29	X34C	29	X33C 29
			X42B	31	X133	18			X46B 31 X47B 31
RL0	X45A	31	X111	5					
RL1	X45B	31	X111	8					
RL2	X45C	31	X111	7					
RL3	X45A	30	X111	10					
RL4	X45B	30	X111	9					
RL5	X45C	30	X111	12					
RL6	X45A	29	X111	11					
RL7	X45B	29	X111	14					
RTCIN	X45C	21	X136	24					
RTCOUT	X45B	21	X136	23					

Für diese Unterlage behalten wir uns alle Rechte vor

C		11.86	HW	1KGF	Tag	Name	Benennung	
				Bearb	12.85	H.W.	ED MOTHERBOARD	Z
				Gepr				
				Norm				
				ROHDE&SCHWARZ			Zeichn.-Nr 806. 0516 S	Blatt-Nr 6 v 8 Bl
And Zust	Anderungs-Mitteilung	Tag	Name	zu Gerat FSA			reg i V 804. 9516 V	erste Z 804. 9516

RTS	X45C 19	X136 4			
RXD	X45B 18	X136 3			
SELECT	X45C 8	X134 13			
SIGN91	X14A 2	X37A 20			
SL0	X45C 29	X111 13			
SL1	X45A 28	X111 16			
SL2	X45B 28	X111 15			
SRQ	X45A 12	X135 10			
SSEL	X45B 2	X140 22			
ST+12V	X37C 24	X222 2			
ST+5V*	X37B 31	X212 16			
ST+85V	X37C 30	X212 5			
ST+VCC	X37C 31	X212 17			
STB	X37C 25	X52A 5			
STEP	X45B 4	X140 28			
STG	X37C 29	X52A 11			
STL1F1	X31A 16	X37C 12			
STL2F1	X31A 17	X37C 13			
STLSG1	X33A 16	X37A 12			
STR	X37C 28	X52A 13			
SWPTRG	X37B 22	X133 24			
STIDF1	X31A 11	X37B 13			
TEMPC	X212 4	X222 4			
TRACK0	X45B 3	X140 25			
TRGLEV	X37A 4	X47A 5			
TX132	X47C 12	X132 7			
TX133	X47C 13	X133 20			
TX91	X14C 9	X47C 14			
TX92	X47C 15	X92C 17			
TXD	X45A 17	X136 2			
UA0	X37B 18	X133 4			
UA1	X37B 19	X133 5			
UA2	X37B 20	X133 6			
UA3	X37B 21	X133 7			
VIDOUT	X37C 22	X139 2			
VOLUME	X14C 2	X47B 5			
VSYNC	X44B 26	X44C 26	X512 1		
VSYNEX	X138 4	X142 8			
WRDATA	X45C 4	X140 27			
WRGATE	X45A 3	X140 26			
WRPROT	X45C 3	X140 24			

Für diese Unterlage behalten wir uns alle Rechte vor

C		11.86	HW	1KGF	Tag	Name	Benennung: ED MOTHERBOARD — Z
D		01.87	HW	Bearb	12.85	H.W.	
				Gepr			
				Norm			
				ROHDE&SCHWARZ			Zeichn -Nr: 806. 0516 S — Blatt Nr: 7 v 8 Bl
And Zust	Anderungs-Mitteilung	Tag	Name	zu Gerat: FSA			reg i V: 804. 9516 V — erste Z: 804. 9516

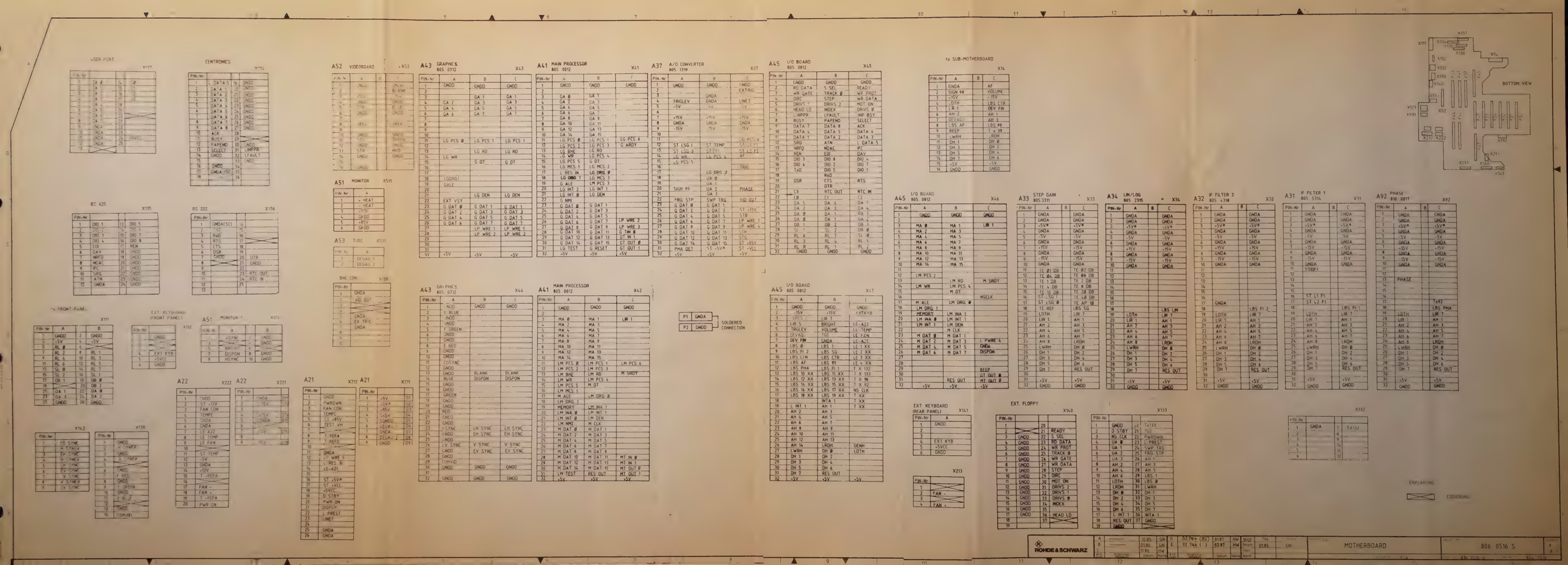
USER PORT
X137
CENTRONICS
X134
IEC 625
X135
RS 232
X136
to FRONT-PANEL
X111
EXT KEYBOARD (FRONT PANEL)
X132
A52 VIDEOBOARD
X52
A43 GRAPHICS 805 0712
X43
A41 MAIN PROCESSOR 805 0012
X41
A37 A/D CONVERTER 805 1319
X37
A45 I/O BOARD 805 0812
X45
to SUB-MOTHERBOARD
X14
A51 MONITOR
X511
A53 TUBE
X531
BNC CON
X139
A43 GRAPHICS 805 0712
X44
A41 MAIN PROCESSOR 805 0012
X42
A45 I/O BOARD 805 0812
X47
A45 I/O BOARD 805 0812
X46
A33 STEP GAIN 805 3311
X33
A34 LIN/LOG 805 2315
X34
A32 IF FILTER 2 805 4318
X32
A31 IF FILTER 1 805 5314
X31
A92 PHASE 810 0017
X92
EXT KEYBOARD (REAR PANEL)
X141
EXT. FLOPPY
X140
X133
X132
X213
BOTTOM VIEW
ERKLARUNG
CODIERUNG
ROHDE&SCHWARZ
MOTHERBOARD
806 0516 S

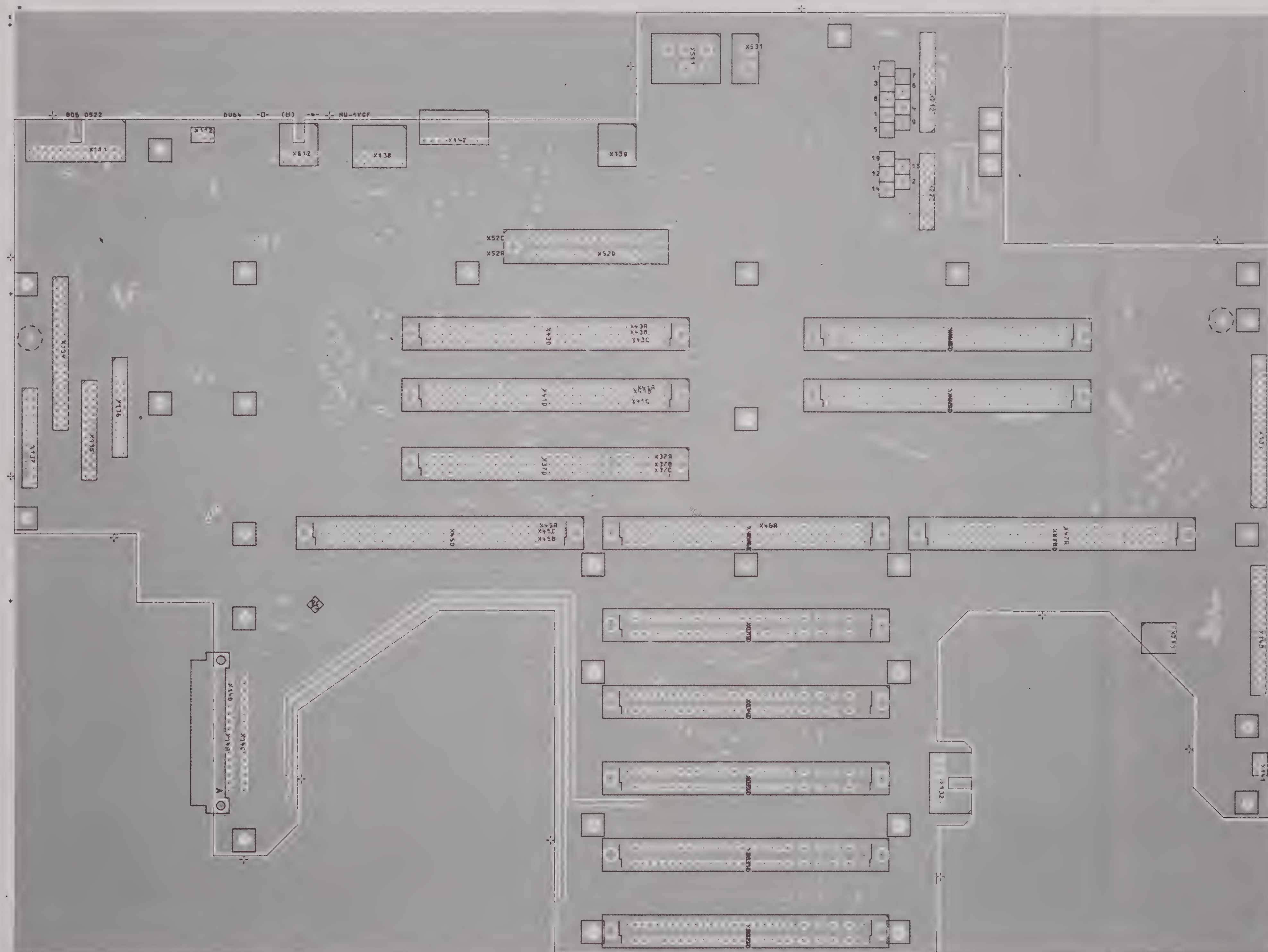

Ansicht und Leitungsführung Bauteilseite
View of tracks on component side

0 1 2 3
ZENTIMETER

VARIANTENERKLÄRUNG/VERSION
VAR 02 – GRUNDAUSFÜHRUNG/BASIC MODEL

J	32765	12.87	HW	Maße ohne Toleranzangabe	Maßstab 1 1
					Halbzeug, Werkstoff
				1KGF · 12.87 · HW	Benennung: MOTHERBOARD · Z
And. Zust.	Änderungs-Mitteilung	Tag	Name	ROHDE&SCHWARZ · zu Gerät FSA	Zeichn.-Nr. 806.0516.01 · Blatt 2 · reg. i. V. 804.9516 V · erste Z 804.9516

Für diese Unterlage behalten wir uns alle Rechte vor

ISO-Projektion Methode E

PF 095 2487 0781

Erich Feucht München 07 6001 8

Für diese Unterlage behalten wir uns alle Rechte vor

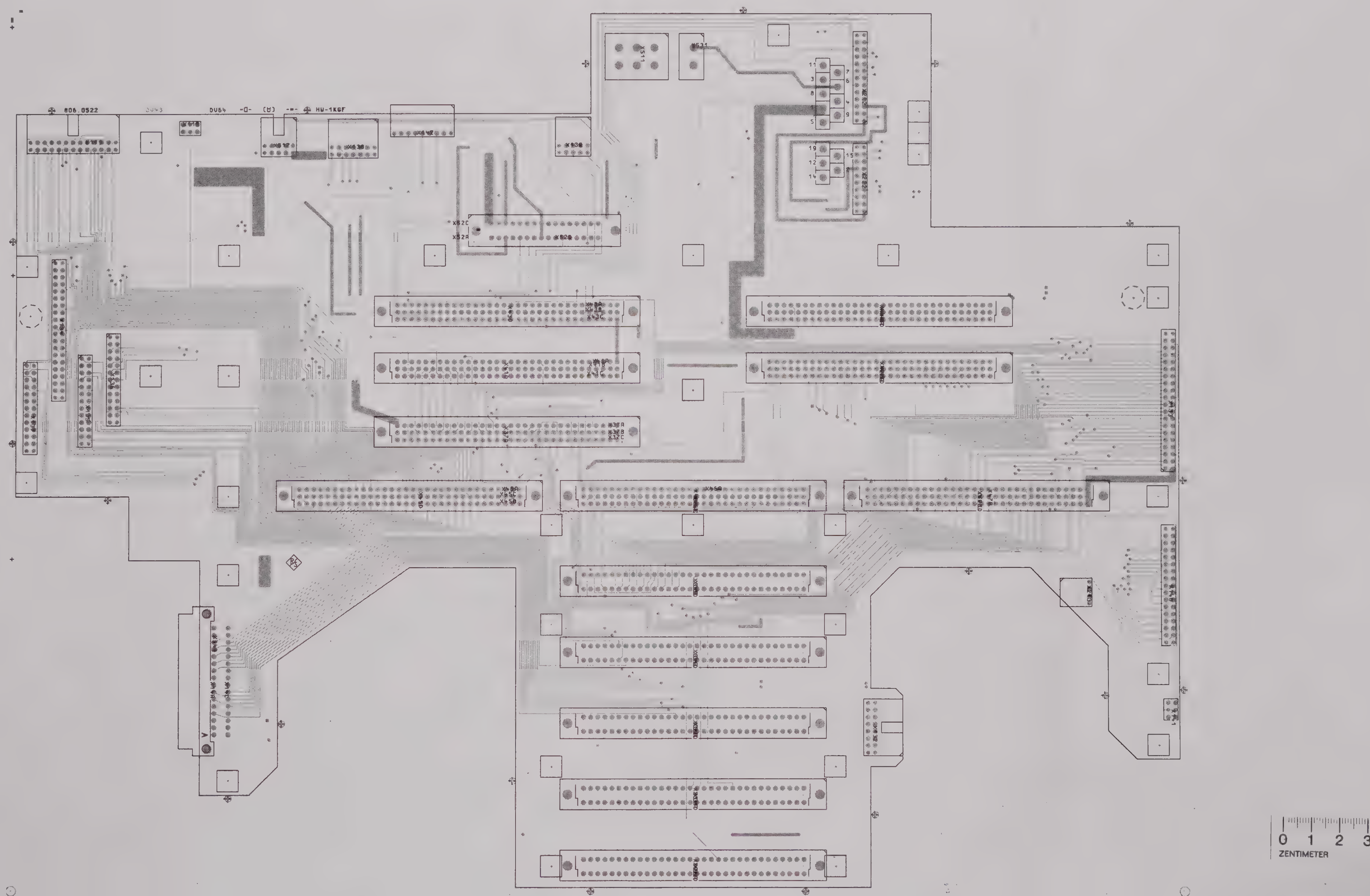

Ansicht und Leitungsführung Bauteilseite
View of tracks on component side

VARIANTENERKLÄRUNG/VERSION
VAR 02 – GRUNDAUSFÜHRUNG/BASIC MODEL

J	32765	12.87	HW	Maße ohne Toleranzangabe			Maßstab 1 : 1	
							Halbzeug, Werkstoff	
				1KGF	Tag	Name	Benennung	
				Bearb	12.87	HW	MOTHERBOARD	Z
				Gepr				
				Norm				
				ROHDE & SCHWARZ			Zeichn.-Nr. 806.0516.01	Blatt-Nr 3
And Zust	Änderungs-Mitteilung	Tag	Name	zu Gerät	FSA		reg. i. V. 804.9516 V / erste Z 804.9516	v Bl

ISO-Projektion Methode E

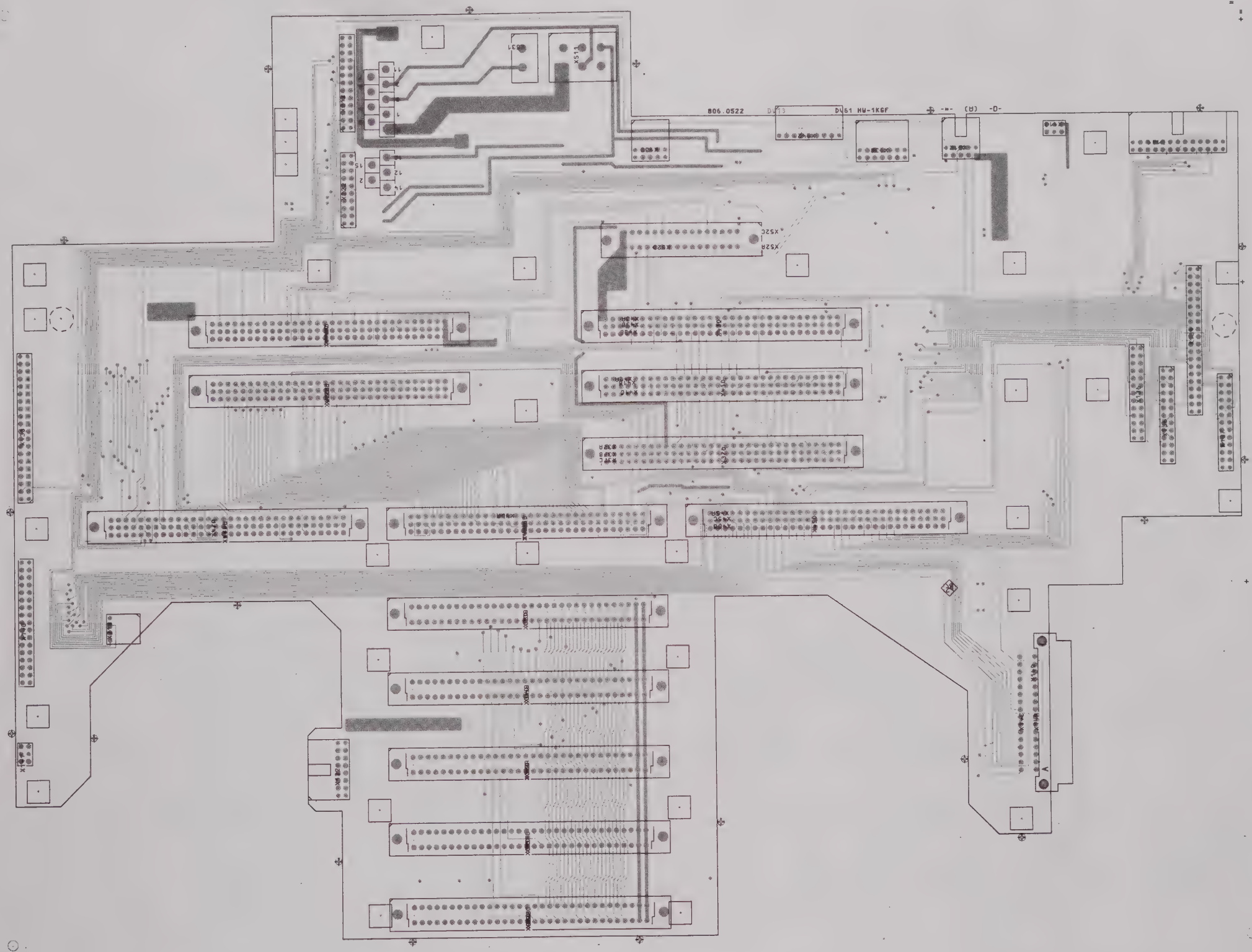

Ansicht und Leitungsführung Lötseite
View of tracks on solder side

0 1 2 3
ZENTIMETER

VARIANTENERKLÄRUNG/VERSION
VAR 02 – GRUNDAUSFÜHRUNG/BASIC MODEL

J	32 765	12.87	HW	Maße ohne Toleranzangabe		Maßstab 1 : 1	
						Halbzeug, Werkstoff	
				1KGF	Tag / Name	Benennung	
				Bearb.	12.87 / HW	MOTHERBOARD	Z
				Gepr			
				Norm			
Änd Zust	Änderungs-Mitteilung	Tag	Name	ROHDE&SCHWARZ		Zeichn.-Nr 806.0516.01	Blatt-Nr 4
				zu Gerat FSA		reg i V 804.9516 V / erste Z 804.9516	v 81

Für diese Unterlage behalten wir uns alle Rechte vor

ISO-Projektion Methode E

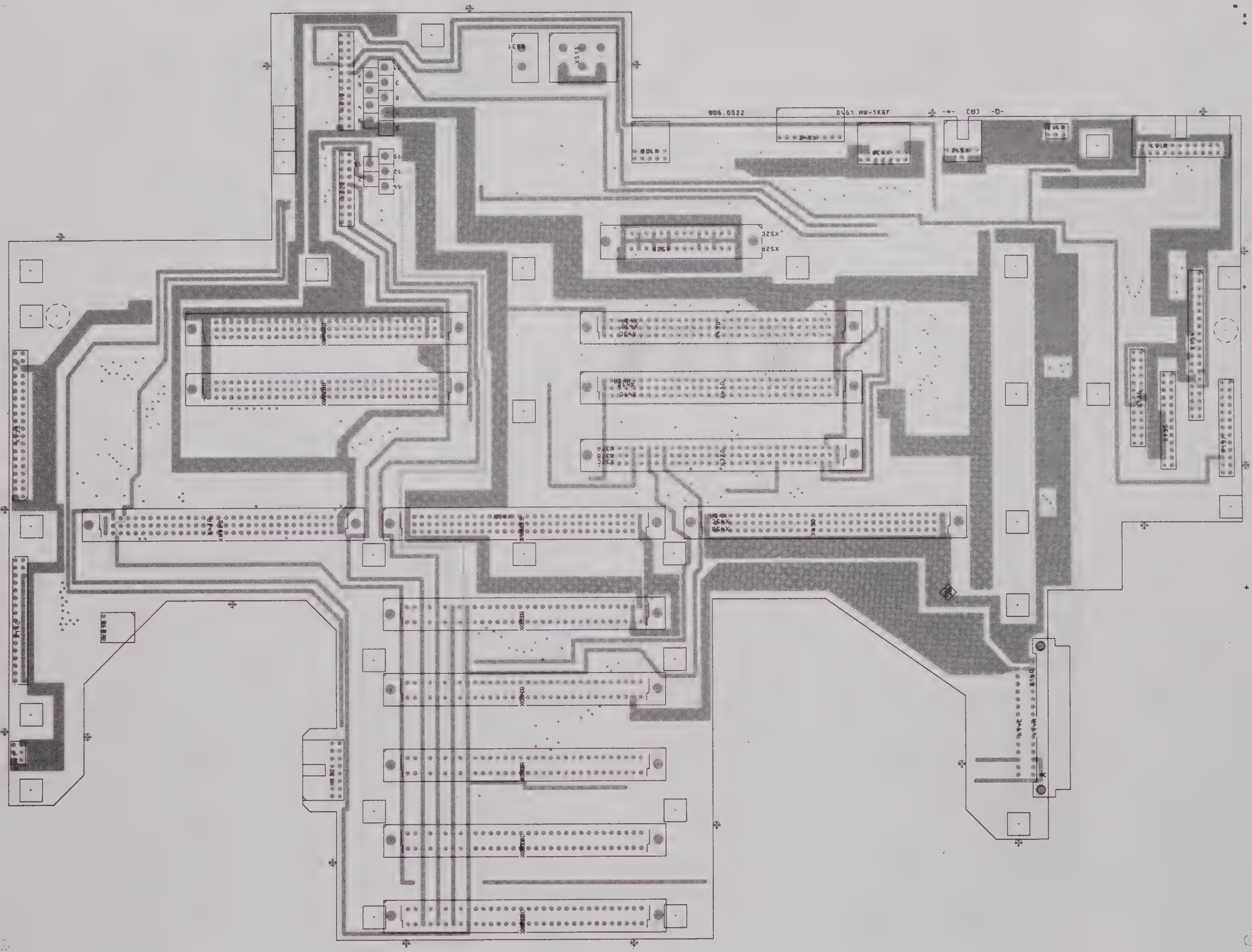

Ansicht und Leitungsführung Lötseite
View of tracks on solder side

VARIANTENERKLÄRUNG/VERSION
VAR 02 – GRUNDAUSFÜHRUNG/BASIC MODEL

J	32765	12.87	HW	Maße ohne Toleranzangabe		Maßstab 1 : 1	
						Halbzeug, Werkstoff	
				1KGF	Tag / Name	Benennung	
				Bearb	12.87 / HW	MOTHERBOARD	Z
				Gepr			
				Norm			
And. Zust.	Änderungs-Mitteilung	Tag	Name	ROHDE & SCHWARZ		Zeichn.-Nr 806.0516.01	Blatt-Nr 5 v Bl
				zu Gerat FSA		reg i V 804.9516 V	erste Z 804.9516

ISO-Projektion Methode E

PF 095 2487-0781

Erich Feucht, München 07 8001 8

+15V	X15A	3	X99A	3	X35A	3	X36A	3				
+5V	X15A	15	X15C	15	X99A	15	X99C	15	X35A	15	X35C	15	X36A	15
+5V	X36C	15												
-15V	X15C	3	X99C	3	X35C	3	X36C	3				
AF	X15C	1	X36A	2								
AF99	X99A	8	X36A	8								
AH1	X15C	6	X99C	6	X35C	6	X36C	6				
AH2	X15A	6	X99A	6	X35A	6	X36A	6				
AH3	X15C	7	X99C	7	X35C	7	X36C	7				
BEEP	X15A	9	X36A	9								
DEVADJ	X15A	7	X99A	7	X35A	7	X36A	7				
DEVFIN	X15C	5	X99C	5	X35C	5	X36C	5				
DH0	X15C	11	X99C	11	X35C	11	X36C	11				
DH1	X15A	11	X99A	11	X35A	11	X36A	11				
DH2	X15C	12	X99C	12	X35C	12	X36C	12				
DH3	X15A	12	X99A	12	X35A	12	X36A	12				
DH4	X15C	13	X99C	13	X35C	13	X36C	13				
DH5	X15A	13	X99A	13	X35A	13	X36A	13				
DH6	X15C	14	X99C	14	X35C	14	X36C	14				
DH7	X15A	14	X99A	14	X35A	14	X36A	14				
GNDA	X15A	1	X99A	1	X99C	1	X35A	1	X35C	1	X36A	1	X36C	1
GNDD	X15A	16	X15C	16	X99A	16	X99C	16	X35A	16	X35C	16	X36A	16
GNDD	X36C	16												
LBSAF	X15A	8	X36C	4								
LBS99	X15C	8	X99C	4								
LBSCTR	X15C	4	X35C	4								
LDTH	X15A	4	X99A	4	X35A	4	X36A	4				
LIR6	X15A	5	X99A	5	X35A	5	X36A	5				
LRDH	X15C	10	X99C	10	X35C	10	X36C	10				
LWRH	X15A	10	X99A	10	X35A	10	X36A	10				
SIGN99	X15A	2	X99A	2								
SPKER	X36C	9	X170	3	X171	4						
SPKGND	X36C	8	X171	2								
SPKNEG	X170	2	X171	1								
TX99	X15C	9	X99C	9								
VOLUME	X15C	2	X36C	2								

Für diese Unterlage behalten wir uns alle Rechte vor

A		12.86	gn.
And	Anderungs-Mitteilung	Tag	Name

Maße ohne Toleranzangabe

1KGF	Tag	Name
Bearb	12.86	HW
Gepr		
Norm		

ROHDE&SCHWARZ

zu Gerat FSA

Maßstab

Halbzeug, Werkstoff

Benennung

Sub-Motherboard

Zeichn.-Nr 806.. 0916 S

Blatt Nr 1 v 2 Bl

reg i V 806. 9516 V

erste Z 806. 9516

ISO Methode E

A36 AF-UNIT 809. 8518 X36

PIN-Nr	A	B	C
1	GNDA		GNDA
2	AF		VOLUME
3	+15V.		-15V
4	LDTH		LBS AF
5	LIR 6		DEVFIN
6	AH2		AH1
7	DEVADJ		AH3
8	AF99		SPKGND
9	BEEP		SPKER
10	LWRH		LRDH
11	DH1		DHØ
12	DH3		DH2
13	DH5		DH4
14	DH7		DH6
15	+5V		+5V
16	GNDD		GNDD

A35 IF-COUNTER 806. 0016 X35

PIN-Nr	A	B	C
1	GNDA		GNDA
2			
3	+15V		-15V
4	LDTH		LBS CTR
5	LIR 6		DEVFIN
6	AH2		AH1
7	DEVADJ		AH3
8			
9			
10	LWRH		LRDH
11	DH1		DHØ
12	DH3		DH2
13	DH5		DH4
14	DH7		DH6
15	+5V		+5V
16	GNDD		GNDD

A99 OPTION 99 809. 8018 X99

PIN-Nr	A	B	C
1	GNDA		GNDA
2	SIGN99		
3	+15V		-15V
4	LDTH		LBS 99
5	LIR 6		DEVFIN
6	AH2		AH1
7	DEVADJ		AH3
8	AF99		
9			TX99
10	LWRH		LRDH
11	DH1		DHØ
12	DH3		DH2
13	DH5		DH4
14	DH7		DH6
15	+5V		+5V
16	GNDD		GNDD

X15

PIN-Nr	A	B	C
1	GNDA		AF
2	SIGN99		VOLUME
3	+15V		-15V
4	LDTH		LBS CTR
5	LIR 6		DEVFIN
6	AH2		AH1
7	DEVADJ		AH3
8	LBS AF		LBS99
9	BEEP		TX99
10	LWRH		LRDH
11	DH1		DHØ
12	DH3		DH2
13	DH5		DH4
14	DH7		DH6
15	+5V		+5V
16	GNDD		GNDD

TO
MOTHERBOARD
806. 0516 S

PHONES X171

1	SPKNEG
2	SPKGND
3	
4	SPKER

SPEAKER X170

1	
2	SPKNEG
3	SPKER

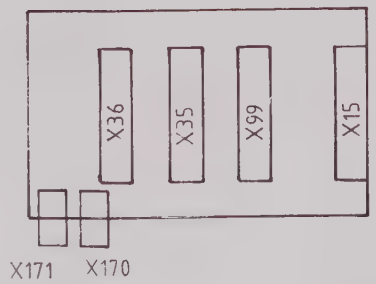

Für diese Unterlage behalten wir uns alle Rechte vor.

ROHDE&SCHWARZ

A		12.86	Gn						IKGF	Tag	Name	Benennung	SUB-MOTHERBOARD
									Bearb	02 86	H.W.	Zeichn.-Nr.	806. 0916 S
									Gepr			Blatt-Nr	2
And Zust	Anderungs-Mitteilung	Datum	Name	And Zust	Anderungs-Mitteilung	Datum	Name		Norm				v 2 Bl
										zu Gerat	FSA	reg : V	804. 9516 V erste Z

Contents

		Page
6	**Service Instructions IF Filter 1**	6.1
6.1	**Function Description**	6.1
6.1.1	LC Filter	6.4
6.1.2	Crystal Filter	6.4
6.1.3	Output Amplifier and Level Detectors for the Selftest	6.7
6.1.4	Filter Control	6.7
6.2	**Testing and Adjustment**	6.8
6.2.1	Power Supply	6.8
6.2.2	Testing the Control and Auxiliary Voltages	6.8
6.2.3	Testing the Function Network	6.8
6.2.4	Final Adjustment	6.9
6.2.4.1	Adjusting Filters 1 and 2	6.9
6.2.4.2	Adjusting Filters 3 to 5	6.10
6.2.4.3	Adjusting Filters 1 to 5	6.11
6.3	**Troubleshooting**	6.12

Parts lists
Circuit diagrams
Component location plans

6 Service Instructions IF Filter 1

(See circuit diagram 805.5337 S)

6.1 Function Description

The module contains 5 almost identical single-pole filters F1, F2 and F3, F4 and F5 separated by the buffer amplifier B1 to B7, a controller for setting the filter bandwidth and the rectifiers GL1 and GL2 for the instrument selftest.

The centre frequency of the filters is 21.4 MHz. The decoupled, single-pole resonators result in a filter with a Gaussian passband curve whose –3-dB bandwidth can be set between 1 kHz and 3 MHz via the microprocessor interface of the filter control.

The bandwidth of an individual filter is approx. 2.6 times the total bandwidth.

Each filter (F1 to F5) contains 2 selectable paths (see Fig. 6-2):

- A crystal filter for bandwidths from approx. 1 kHz to 30 kHz
- An LC filter for bandwidths from 80 kHz to 3 MHz.

The bandwidth is set within these limits by a 7-bit D/A converter.

The transformer at the module input is used to adapt the first amplifier to 50 Ω and provides a voltage gain of approx. 9 dB.

IF filter 1 module

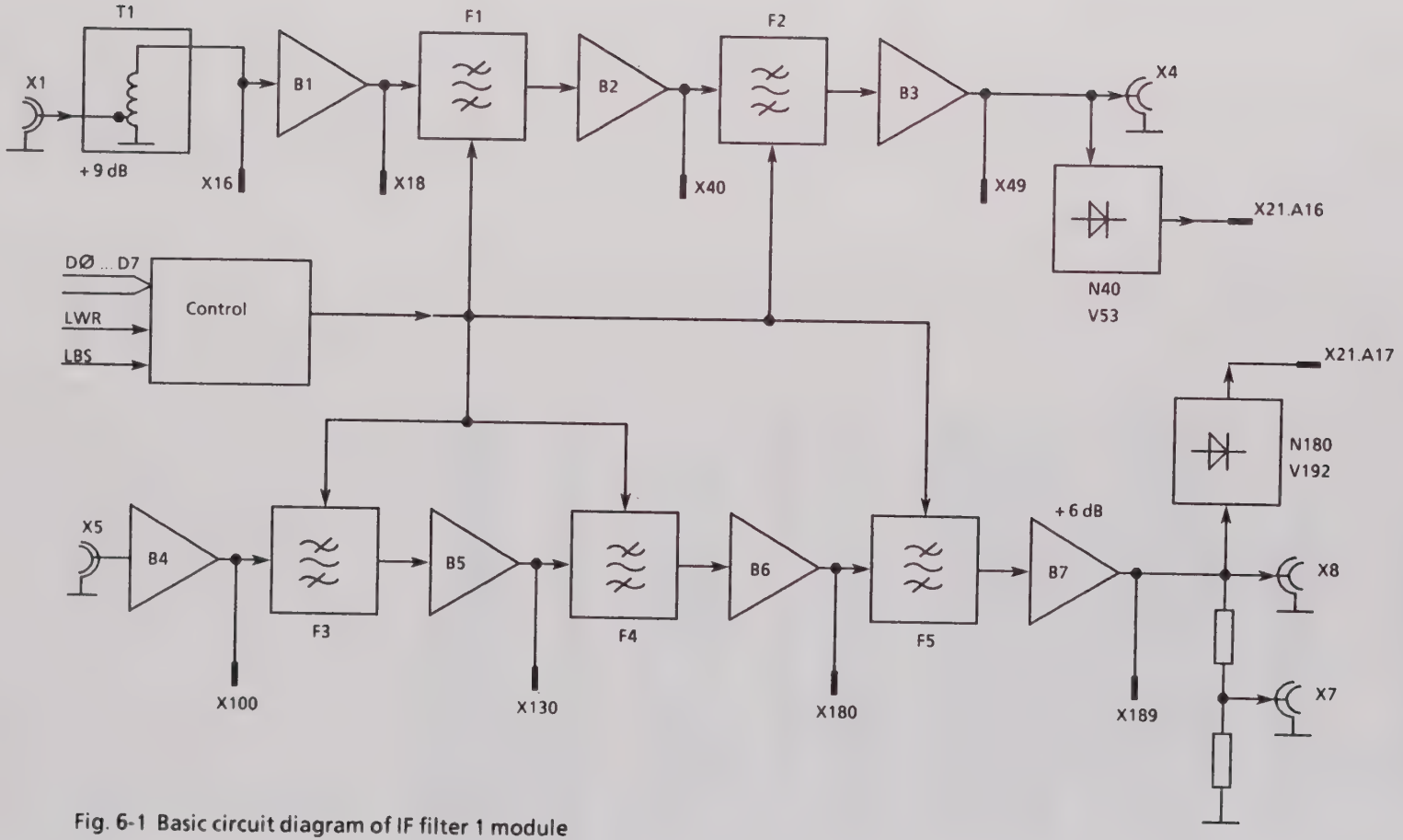

Fig. 6-1 Basic circuit diagram of IF filter 1 module

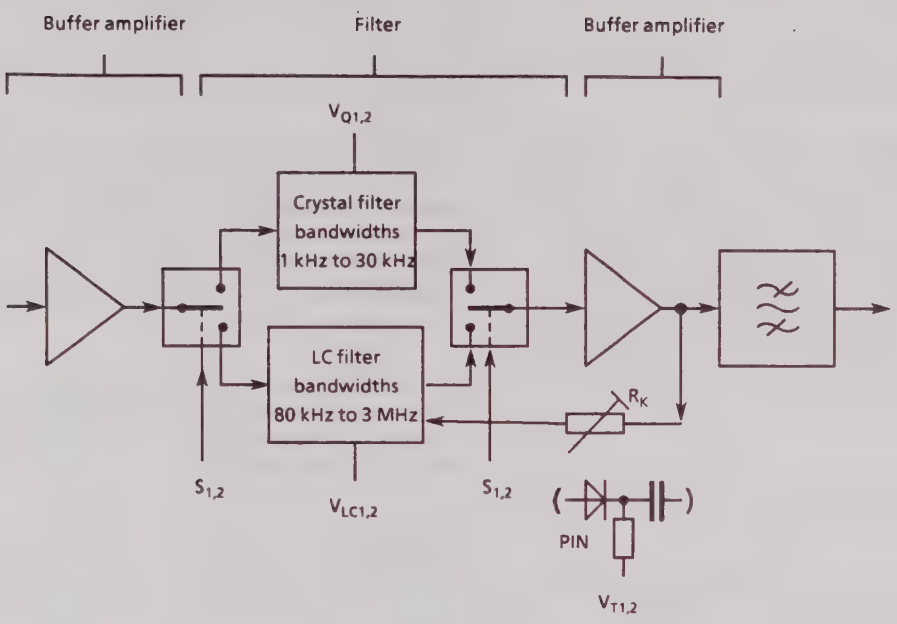

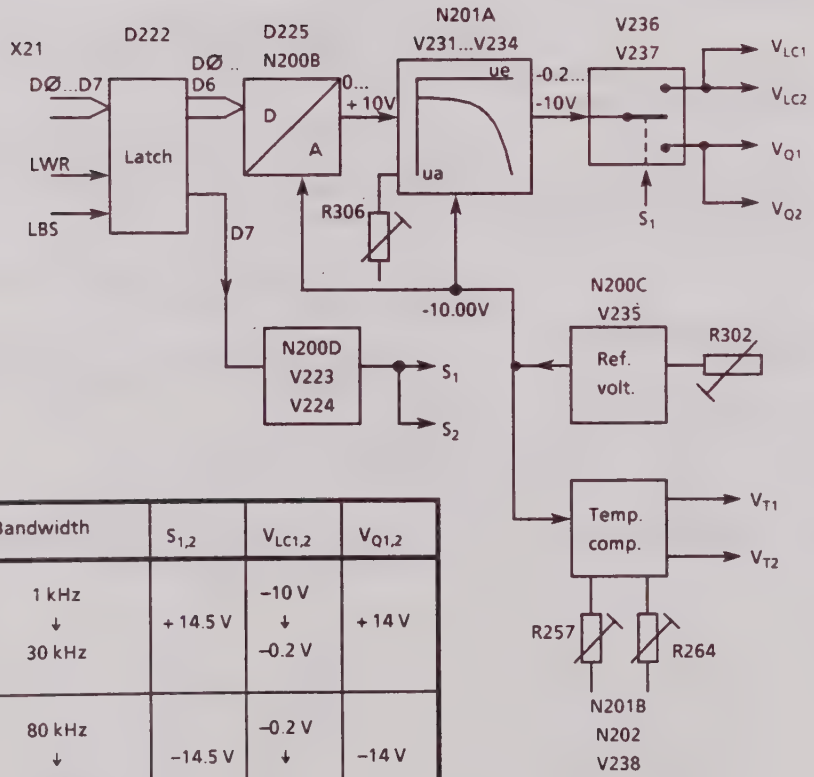

Bandwidth	$S_{1,2}$	$V_{LC1,2}$	$V_{Q1,2}$
1 kHz ↓ 30 kHz	+ 14.5 V	−10 V ↓ −0.2 V	+ 14 V
80 kHz ↓ 3 MHz	−14.5 V	−0.2 V ↓ −10 V	−14 V

Fig. 6-2 Block diagram of a filter and associated control

6.1.1 LC Filter

The function of an LC filter is explained using filter F3 (see Figs. 6-1 to 6-3).

The buffer amplifier V100 and V101 with its low-impedance output drives the parallel resonant circuit of L110, C121 to C123 via the series resistance of the two PIN diodes V108 and V112. The resonant circuit is loaded with a high impedance by the following amplifier. The quality of the circuits, and thus the filter bandwidth, is determined by the resistance of the PIN diodes which is set by V_{LC2} with the current source N101A.

L108 and C117 compensate the parallel capacitance of V108 and V112.

The filter C118, C119, L109 and C116 generates an attenuation pole at approx. 40 MHz.

The signal returned via R123 and R164 compensates the losses of the resonant circuit elements.

The centre frequency is set using C121, C129 and X108. C123 is used for temperature compensation.

The resistors R163 and R117 attenuate the signal in the LC branch by approx. 1 dB so that the level of the LC filter and crystal filter can be set to be equal using R93 in B3.

The switchover between the LC filter and the crystal filter is made by the signal S2.

The diodes V108, V112 and V110 conduct if the LC filter is switched on. V105, V107 and V109 are blocked.

The opposite is true if the crystal filter is switched on.

6.1.2 Crystal Filter

The function of a crystal filter will be described using filter F3 (see Figs. 6-1, 6-2 and 6-4).

The output signal of the buffer amplifier B4 (V100, V101) is applied via V105 to the emitter follower V102 and from its output via the crystal B100 operated in series resonance to the load resistor formed by the PIN diodes V106 and V111 and then via V107 to the high-impedance input of the following amplifier.

The quality of the series circuit L_Q, C_Q, R_S, V106 and V111, and thus the filter bandwidth, is determined by the resistance of the PIN diodes which is set by V_{Q2} with the current source N100A.

The collector of transistor V102 applies a larger positive feedback current I_{MK} to the feedback of B4 the smaller the load resistance R_L. The gain of B4 is thus increased and compensates the voltage division at R_S and R_L. The compensation is adjusted using R102.

The reactive components of R_L and the input impedance of B5 are compensated by C112 and L107.

In order to compensate the parallel capacitance C_P of the crystal, a signal of equal magnitude but rotated in phase by 180° by V103 is added to the output signal at V106 by C109 and C110.

The switchover between the crystal filter and the LC filter is made by the signal S2.

If the crystal filter is active, transistor V102 obtains its collector current via R107, L106, V105 and L113.

V104 is blocked and V107 conducts.

If the LC filter is switched on, V102, V103, V105 and V107 are blocked, V104 conducts.

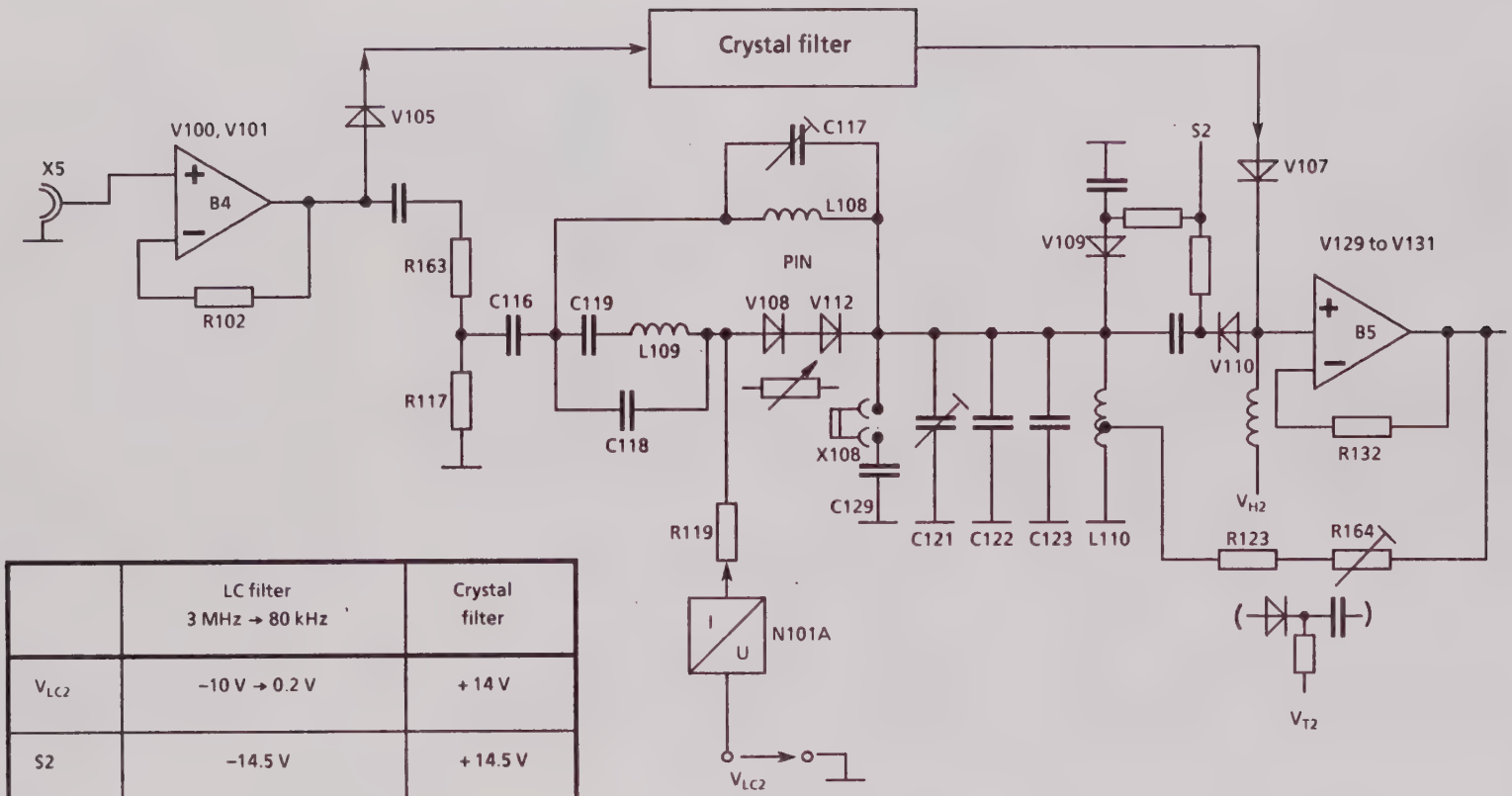

	LC filter 3 MHz → 80 kHz	Crystal filter
V_{LC2}	−10 V → 0.2 V	+ 14 V
S2	−14.5 V	+ 14.5 V

Fig. 6-3 LC filter

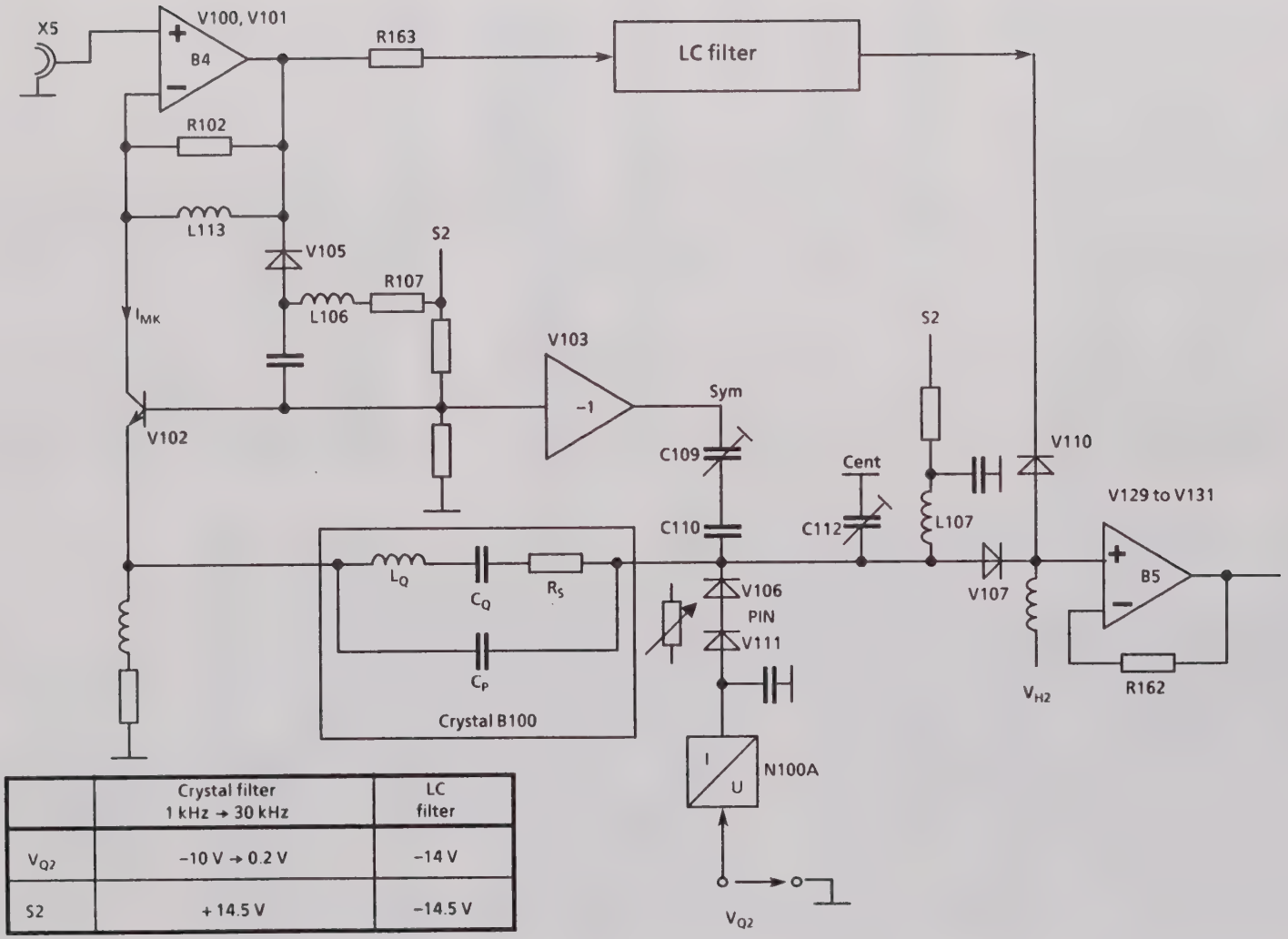

	Crystal filter 1 kHz → 30 kHz	LC filter
V_{Q2}	−10 V → 0.2 V	−14 V
S2	+ 14.5 V	−14.5 V

Fig. 6-4 Crystal filter

6.1.3 Output Amplifier and Level Detectors for the Selftest

In the negative feedback of B3 (V58, V54, V55), the gain of the LC filters is adjusted to that of the crystal filters by means of R93.

B7 (V197 to V199) has a negative feedback via transformer T180 and a gain of V ≈ +6 dB. Detectors (V53, N40 and V192, N180) are provided at the outputs X4 and X8 to monitor the levels during the selftest.

6.1.4 Filter Control

Switchover between the LC filters and crystal filters, as well as control of the D/A converter, is handled by the microprocessor via latch D222.

The coupling of the bandwidth setting between F1-F2 and F3-F5 can be disabled in the mode 'crystal filter' via D223. F1-F2 are set to maximum bandwidth whereas the bandwidth of F3-F5 may be varied via U_{Q2}.

Improved intermodulation characteristics (low distortion) for F1-F2 are thus obtained.

A control command is read in as follows:

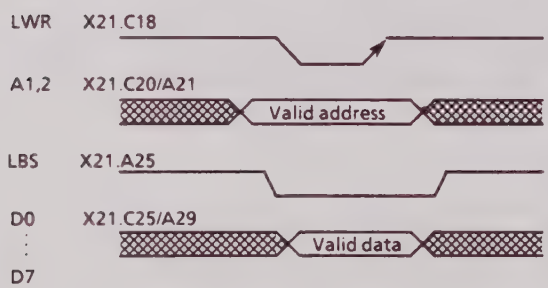

The required setting commands can be obtained from the following truth table:

Bandwidth	Addr. A1	Data	
		DØ ... D6	D7
Crystal filter Normal 1 kHz → 30 kHz	Ø	127_{10} → Ø	Ø
Low distortion	1	127_{10} → Ø	Ø
LC filter 80 kHz → 3 MHz	X	Ø → 127_{10}	1

The output voltage of the D/A converter is applied via a function network (V231 to V234, N201) to a selector (V236 and V237) which connects the output voltage to the control current sources of the active filter branch.

In order to compensate the temperature-dependence of the Q factor of the coil in the LC filters, the negative feedback resistors R_K in filters F1 and F5 have been replaced by the PIN diodes V20 and V200 (see Figs. 6-2 and 6-3).

These are controlled by the voltages V_{T1} and V_{T2} which are generated by the temperature sensor V238 and the amplifiers N201B and N202.

The voltage at X21.A11 serves for PCB detection.

6.2 Testing and Adjustment

Equipment required

- Digital voltmeter (DVM)
- Sweep generator with monitor or network analyzer

6.2.1 Power Supply

Pin	Voltage	Current
X21.A,C7	+15 V ±0.3 V	250 to 450 mA
X21.A,C9	−15 V ±0.3 V	30 to 80 mA
X21.A,C31	+5 V ±0.2 V	5 to 10 mA
X21.A,C5	−5 V ±0.2V	200 to 300 mA
X21.A, C1, 32	0 V	—

6.2.2 Testing the Control and Auxiliary Voltages

Check or set the following voltages using the DVM:

Setting on module (Addr. A1) Data	Test point	Measured value
—	X50. A3	Adjust -10 V ±20 mV using R302
—	B7	-0.5 to -1.4 V
—	B8	-0.5 to -1.4 V
—	A4	+2.9 to +3.2 V
(Ø) 128_{10}	A1	+12 to +15.5 V
(Ø) 128_{10}	A5	-14 to -15.5 V
(Ø) 128_{10}	A2	0 ±60 mV
(Ø) 128_{10}	B1	0 ±0.2 V
(Ø) 127_{10}	A1	+9.5 to +10.5 V
(Ø) 127_{10}	A5	-9 to -10.2 V
(Ø) 127_{10}	A2	0 ±60 mV
(Ø) 127_{10}	B1	0 ±0.2 V
(Ø) 127_{10}	B2	-9 to -10 5 V
(Ø) 127_{10}	B3	+13.5 to +14.5 V
(1) 127_{10}	B2	-0.3 V ±50 mV
(Ø) 255_{10}	B2	-10 to -11 V
	B3	-9 to -10.5 V
—	X21.A11	+0.9 to +1 V

6.2.3 Testing the Function Network

Setting on module	Test point	Measured value
0_{10}	X50. B1	−0.01 ±50mV
20_{10}		−0.13 ±50mV
40_{10}		−0.50 ±50mV
60_{10}		−1.20 ±50mV
80_{10}		−2.30 ±50mV
100_{10}		−4.25 ±50mV
120_{10}		−8.00 ±0.1 V
127_{10}		−9.50 ±0.2 V

6.2.4 Final Adjustment

Both covers must be fitted.

6.2.4.1 Adjusting Filters 1 and 2

- Connect sweep generator with centre frequency 21.4 MHz/-10 dBm to X1.
- Connect monitor to X4.

Setting on module		Sweep generator span	Inserted jumpers	Measured values	Adjustment
a)	5_{10}	500 kHz	X17	—	C51 to centre C47 to symmetry
b)			X41	—	C18 to centre C14 to symmetry
c)			—	–2.5 ± 0.5 dBm at 21.4 MHz	—
d)	120_{10}	10 kHz	—	Same level as in *c)* ± 0.1 dB	R41
e)	250_{10}	1 MHz	X42	0 to –3 dBm at max.	—
f)	130_{10}			—	C28 to centre C24 to minimum
				Same level as in *e)* ± 0.1 dB	R257
g)			X19	—	C60 to centre C55 to minimum
				Same level as in *e)* ± 0.1 dB	R94
h)	50_{10}	0 Hz	—	X21. A16 (+ 0.4 V to + 0.7 V)	—

6.2.4.2 Adjusting Filters 3 to 5

- Connect sweep generator with centre frequency 21.4 MHz/0 dBm to X5.
- Connect monitor to X8.
- Insert jumper on X106.

Setting on module		Sweep generator span	Inserted jumpers	Measured values	Adjustment
a)	5_{10}	500 kHz	X132 X182	—	C112 to centre C109 to symmetry
b)			X102 X182	—	C142 to centre C138 to symmetry
c)			X102 X132	—	C191 to centre C187 to symmetry
d)			—	+4.5 ±0.5 dBm at 21.4 MHz	—
e)	120_{10}	10 kHz	—	Same level as in ***d)*** ±0.1 dB	R132
f)	250_{10}	1 MHz	X131 X181	+4.5 ±0.5 dBm at 21.4 MHz	—
g)	130_{10}			—	C121 to centre C117 to minimum
				Same level as in ***f)*** ±0.1 dB	R164
h)			X101 X181	—	C149 to centre C146 to minimum
				Same level as in ***f)*** ±0.1 dB	R174
i)			X131 X101	—	C198 to centre C212 to minimum
			—	Same level as in ***f)*** ±0.1 dB	R264
j)	50_{10}	0 Hz	—	X21.A17 (+0.5 V ±0.1 V)	—

6.2.4.3 Adjusting Filters 1 to 5

- Connect sweep generator with centre frequency 21.4 MHz/-10 dBm to X1.
- Connect X4 and X5.

Setting on module	Sweep generator span	Measured values	Adjustment and testing
a) 50_{10}	100 kHz	+2 ±0.5 dBm at 21.4 MHz	—
b) 230_{10}	5 MHz	Level equality of maximum as in *a)* ±0.1 dB	R93
c) 130_{10}	300 kHz	Level equality of maximum as in *a)* ±0.1 dB	R94
d) 50_{10}	100 kHz	Level equality of maximum as in Monitor at X7 X8 terminated by 50 Ω Level relative to *a)* –30 ±1 dB	—
e) 115_{10}	2 kHz 20 kHz	–3-dB bandwidth –60-dB bandwidth	Calculate the shape factor $SF = \frac{\text{–60-dB bandwidth}}{\text{–3-dB bandwidth}}$ in each case. It must be <12 at each bandwidth. Measure level maximum in each case. ΔP < 1 dB over all bandwidths
75_{10}	5 kHz 50 kHz	–3-dB bandwidth –60-dB bandwidth	
35_{10}	20 kHz 200 kHz	–3-dB bandwidth –60-dB bandwidth	
5_{10}	50 kHz 500 kHz	–3-dB bandwidth 30 kHz ±500 Hz *) –60-dB bandwidth	
140_{10}	200 kHz 2 MHz	–3-dB bandwidth –60-dB bandwidth	
175_{10}	500 kHz 5 MHz	–3-dB bandwidth –60-dB bandwidth	
210_{10}	2 MHz 20 MHz	–3-dB bandwidth –60-dB bandwidth	
245_{10}	5 MHz 30 MHz	–3-dB bandwidth –60-dB bandwidth	

*) Adjust using R306

6.3 Troubleshooting

Bandwidths 30 kHz or 80 kHz cannot be set.

- Check FETs (e.g. V129)
- Check PIN diodes (e.g. V108, V112, V106, V111)
- Check function network (D225, N200B, N201A, V231 to V234, V236, V237)
- Adjust R306

Level with 1-kHz bandwidth drops compared to 30-kHz bandwidth.

- Check amplifier (working points)
- Crystal faulty (series resistance too large)
- Adjust internal impedance (R41, R132)

Level with 80-kHz bandwidth drops compared to 1-MHz bandwidth.

- Adjust LC filter centre frequency (C28, C60, C121, C149, C198)
- Adjust positive feedback (e.g. R164)

Bandwidths 1 kHz or 3 MHz cannot be set.

- Check PIN diodes (e.g. V108, V112, V106, V111)
- Check function network (D225, N200B, N201A, V231 to V234, V236, V237)
- Check current sources (e.g. N101, N100)

ROHDE&SCHWARZ

Schaltteillisten
Stromläufe
Bestückungspläne

Part lists
Circuit diagrams
Components plans

Listes des pièces détachées
Schémas de Circuit
Plans des composants

(R 29500 Bl 2)
095.1000 BL 2

Kennz. Comp.No.	Benennung Designation	Sachnummer Stock No.	Hersteller Manufacturer	Bezeichnung Designation	enthalten in contained in
B1	EQ 21,400MHZ HC-49/U QUARTZ CRYSTAL UNIT	805.5437	QK	R&S-ZCHNG.805.5437	
B40	EQ 21,400MHZ HC-49/U QUARTZ CRYSTAL UNIT	805.5437	QK	R&S-ZCHNG.805.5437	
B100	EQ 21,400MHZ HC-49/U QUARTZ CRYSTAL UNIT	805.5437	QK	R&S-ZCHNG.805.5437	
B130	EQ 21,400MHZ HC-49/U QUARTZ CRYSTAL UNIT	805.5437	QK	R&S-ZCHNG.805.5437	
B180	EQ 21,400MHZ HC-49/U QUARTZ CRYSTAL UNIT	805.5437	QK	R&S-ZCHNG.805.5437	
C2	CC 68PF+-2%6X7NP0 CAPACITOR	CC 087.6529	VALVO	2222 678 10689	
C3	CC 33PF+-2%4X5NP0 CAPACITOR	CC 087.6487	VALVO	2222 678 10339	
C4	CC 120PF+-2%6X9NP0 CAPACITOR	CC 087.6558	VALVO	2222 678 10121	
C5 ..9	CC 10NF-20+50%7X8R4000 CAPACITOR	CC 087.7525	VALVO	2222 63051 64051103	
C11	CC 10NF-20+50%7X8R4000 CAPACITOR	CC 087.7525	VALVO	2222 63051 64051103	
C12	CC 10NF-20+50%7X8R4000 CAPACITOR	CC 087.7525	VALVO	2222 63051 64051103	
C13	CC 8,2PF+-0,25PF3X4NP0 CAPACITOR	CC 087.6412	VALVO	2222 678 09828	
C14	CT 4PF N033 7S-03 TRIMMER	CT 087.7190	STETTNER	7S TRIKO 03	
C15	CC 3,9PF/0,25PF63V3X5N750 CAPACITOR	CC 099.5568	VALVO	2222 678 57398	
C16	CC 100PF+-2%6X9NP0 CAPACITOR	CC 087.6541	VALVO	2222 678 10101	
C17	CC 10NF-20+50%7X8R4000 CAPACITOR	CC 087.7525	VALVO	2222 63051 64051103	
C18	CT 15,5PF N750 ABGL OBEN DISC TRIMMER	CT 065.9677	STETTNER	7-STRIKO 03/4,5/20N7	
C20	CC 10NF-20+50%7X8R4000 CAPACITOR	CC 087.7525	VALVO	2222 63051 64051103	
C21	CC 10NF-20+50%7X8R4000 CAPACITOR	CC 087.7525	VALVO	2222 63051 64051103	
C22	CC 10NF-20+50%7X8R4000 CAPACITOR	CC 087.7525	VALVO	2222 63051 64051103	
C23	CC 180PF+- 5%100V NP0 VIE CERAMIC CAPACITOR	CC 060.0807	UNIONCARB	C052C181J2G1CA	
C24	CT 4PF N033 7S-03 TRIMMER	CT 087.7190	STETTNER	7S TRIKO 03	
C25	CC 27PF+-2%4X5NP0 CAPACITOR	CC 087.6470	VALVO	2222 678 10279	
C26	CC 120PF+-2%6X9NP0 CAPACITOR	CC 087.6558	VALVO	2222 678 10121	
C28	CT 15,5PF N750 ABGL OBEN DISC TRIMMER	CT 065.9677	STETTNER	7-STRIKO 03/4,5/20N7	
C29	CG 100PF+-2PF250VTKE MICA CAPACITOR	CG 023.1503	JAHRE	53-1/100PF/2PF/250	
C30	CC 10PF+-0,25PF3X4N750 CAPACITOR	CC 087.6787	VALVO	2222 678 57109	
C31 ..35	CC 10NF-20+50%7X8R4000 CAPACITOR	CC 087.7525	VALVO	2222 63051 64051103	
C36	CC 10PF+-0,25PF3X4NP0 CAPACITOR	CC 087.6429	VALVO	2222 678 09109	
C37	CC 10NF-20+50%7X8R4000 CAPACITOR	CC 087.7525	VALVO	2222 63051 64051103	
C40	CK 100NF+-5%63V5RM MKT CAPACITOR	CK 099.2930	WIMA	MKS/2/63/0,1UF/5%	
C41 ..45	CC 10NF-20+50%7X8R4000 CAPACITOR	CC 087.7525	VALVO	2222 63051 64051103	
C46	CC 8,2PF+-0,25PF3X4NP0 CAPACITOR	CC 087.6412	VALVO	2222 678 09828	
C47	CT 4PF N033 7S-03 TRIMMER	CT 087.7190	STETTNER	7S TRIKO 03	
C48	CC 3,9PF/0,25PF63V3X5N750 CAPACITOR	CC 099.5568	VALVO	2222 678 57398	
C49	CC 100PF+-2%6X9NP0 CAPACITOR	CC 087.6541	VALVO	2222 678 10101	
C50	CC 10NF-20+50%7X8R4000 CAPACITOR	CC 087.7525	VALVO	2222 63051 64051103	
C51	CT 15,5PF N750 ABGL OBEN DISC TRIMMER	CT 065.9677	STETTNER	7-STRIKO 03/4,5/20N7	

Für diese Unterlage behalten wir uns alle Rechte vor

Kennz. Comp.No.	Benennung Designation	Sachnummer Stock No.	Hersteller Manufacturer	Bezeichnung Designation	enthalten in contained in
C54	CC 10NF-20+50%7X8R4000 CAPACITOR	CC 087.7525	VALVO	2222 63051 64051103	
C55	CT 4PF N033 7S-03 TRIMMER	CT 087.7190	STETTNER	7S TRIKO 03	
C56	CC 180PF+- 5%100V NP0 VIE CERAMIC CAPACITOR	CC 060.0807	UNIONCARB	C052C181J2G1CA	
C57	CC 27PF+-2%4X5NP0 CAPACITOR	CC 087.6470	VALVO	2222 678 10279	
C58	CC 120PF+-2%6X9NP0 CAPACITOR	CC 087.6558	VALVO	2222 678 10121	
C60	CT 15,5PF N750 ABGL OBEN DISC TRIMMER	CT 065.9677	STETTNER	7-STRIKO 03/4,5/20N7	
C61	CG 100PF+-2PF250VTKE MICA CAPACITOR	CG 023.1503	JAHRE	53-1/100PF/2PF/250	
C62	CC 10PF+-0,25PF3X4N750 CAPACITOR	CC 087.6787	VALVO	2222 678 57109	
C63 ..70	CC 10NF-20+50%7X8R4000 CAPACITOR	CC 087.7525	VALVO	2222 63051 64051103	
C72	CK 220NF+-5%63V5RM MKT CAPACITOR	CK 099.2952	WIMA	MKS2/63/0,22UF/5%	
C73	CK 220NF+-5%63V5RM MKT CAPACITOR	CK 099.2952	WIMA	MKS2/63/0,22UF/5%	
C75	CK 100NF+-5%63V5RM MKT CAPACITOR	CK 099.2930	WIMA	MKS/2/63/0,1UF/5%	
C76 ..78	CC 10NF-20+50%7X8R4000 CAPACITOR	CC 087.7525	VALVO	2222 63051 64051103	
C82 ..85	CC 10NF-20+50%7X8R4000 CAPACITOR	CC 087.7525	VALVO	2222 63051 64051103	
C89	CC 10NF-20+50%7X8R4000 CAPACITOR	CC 087.7525	VALVO	2222 63051 64051103	
C90	CC 10NF-20+50%7X8R4000 CAPACITOR	CC 087.7525	VALVO	2222 63051 64051103	
C92	CC 10NF-20+50%7X8R4000 CAPACITOR	CC 087.7525	VALVO	2222 63051 64051103	
C93	CC 10NF-20+50%7X8R4000 CAPACITOR	CC 087.7525	VALVO	2222 63051 64051103	
C94	CC 10NF-20+50%7X8R4000 CAPACITOR	CC 087.7525	VALVO	2222 63051 64051103	
C95	CC 10PF+-0,25PF3X4NP0 CAPACITOR	CC 087.6429	VALVO	2222 678 09109	
C97	CC 10NF-20+50%7X8R4000 CAPACITOR	CC 087.7525	VALVO	2222 63051 64051103	
C98	CC 10NF-20+50%7X8R4000 CAPACITOR	CC 087.7525	VALVO	2222 63051 64051103	
C99	CC 10NF-20+50%7X8R4000 CAPACITOR	CC 087.7525	VALVO	2222 63051 64051103	
C100 ..106	CC 10NF-20+50%7X8R4000 CAPACITOR	CC 087.7525	VALVO	2222 63051 64051103	
C107	CC 4,7PF+-0,25PF3X4NP0 CAPACITOR	CC 087.6387	VALVO	2222 678 09478	
C108	CC 100PF+-2%6X9NP0 CAPACITOR	CC 087.6541	VALVO	2222 678 10101	
C109	CT 4PF N033 7S-03 TRIMMER	CT 087.7190	STETTNER	7S TRIKO 03	
C110	CC 3,9PF/0,25PF63V3X5N750 CAPACITOR	CC 099.5568	VALVO	2222 678 57398	
C111	CC 10NF-20+50%7X8R4000 CAPACITOR	CC 087.7525	VALVO	2222 63051 64051103	
C112	CT 15,5PF N750 ABGL OBEN DISC TRIMMER	CT 065.9677	STETTNER	7-STRIKO 03/4,5/20N7	
C114	CC 10NF-20+50%7X8R4000 CAPACITOR	CC 087.7525	VALVO	2222 63051 64051103	
C115	CC 10NF-20+50%7X8R4000 CAPACITOR	CC 087.7525	VALVO	2222 63051 64051103	
C116	CC 180PF+- 5%100V NP0 VIE CERAMIC CAPACITOR	CC 060.0807	UNIONCARB	C052C181J2G1CA	
C117	CT 4PF N033 7S-03 TRIMMER	CT 087.7190	STETTNER	7S TRIKO 03	
C118	CC 27PF+-2%4X5NP0 CAPACITOR	CC 087.6470	VALVO	2222 678 10279	
C119	CC 120PF+-2%6X9NP0 CAPACITOR	CC 087.6558	VALVO	2222 678 10121	
C121	CT 15,5PF N750 ABGL OBEN DISC TRIMMER	CT 065.9677	STETTNER	7-STRIKO 03/4,5/20N7	
C122	CG 100PF+-2PF250VTKE MICA CAPACITOR	CG 023.1503	JAHRE	53-1/100PF/2PF/250	
C123	CC 10PF+-0,25PF3X4N750 CAPACITOR	CC 087.6787	VALVO	2222 678 57109	

Kennz. Comp.No.	Benennung Designation	Sachnummer Stock No.	Hersteller Manufacturer	Bezeichnung Designation	enthalten in contained in
C124 ..127	CC 10NF-20+50%7X8R4000 CAPACITOR	CC 087.7525	VALVO	2222 63051 64051103	
C128	CC 4,7PF+-0,25PF3X4NP0 CAPACITOR	CC 087.6387	VALVO	2222 678 09478	
C129	CC 10PF+-0,25PF3X4NP0 CAPACITOR	CC 087.6429	VALVO	2222 678 09109	
C130 ..136	CC 10NF-20+50%7X8R4000 CAPACITOR	CC 087.7525	VALVO	2222 63051 64051103	
C137	CC 4,7PF+-0,25PF3X4NP0 CAPACITOR	CC 087.6387	VALVO	2222 678 09478	
C138	CT 4PF N033 7S-03 TRIMMER	CT 087.7190	STETTNER	7S TRIKO 03	
C139	CC 2,2PF+-0,25PF3X4NP0 CAPACITOR	CC 087.6341	VALVO	2222 678 09228	
C140	CC 100PF+-2%6X9NP0 CAPACITOR	CC 087.6541	VALVO	2222 678 10101	
C141	CC 10NF-20+50%7X8R4000 CAPACITOR	CC 087.7525	VALVO	2222 63051 64051103	
C142	CT 15,5PF N750 ABGL OBEN DISC TRIMMER	CT 065.9677	STETTNER	7-STRIKO 03/4,5/20N7	
C144	CC 10NF-20+50%7X8R4000 CAPACITOR	CC 087.7525	VALVO	2222 63051 64051103	
C145	CC 180PF+- 5%100V NP0 VIE CERAMIC CAPACITOR	CC 060.0807	UNIONCARB	C052C181J2G1CA	
C146	CT 4PF N033 7S-03 TRIMMER	CT 087.7190	STETTNER	7S TRIKO 03	
C147	CC 27PF+-2%4X5NP0 CAPACITOR	CC 087.6470	VALVO	2222 678 10279	
C148	CC 120PF+-2%6X9NP0 CAPACITOR	CC 087.6558	VALVO	2222 678 10121	
C149	CT 15,5PF N750 ABGL OBEN DISC TRIMMER	CT 065.9677	STETTNER	7-STRIKO 03/4,5/20N7	
C150	CG 100PF+-2PF250VTKE MICA CAPACITOR	CG 023.1503	JAHRE	53-1/100PF/2PF/250	
C151	CC 10PF+-0,25PF3X4N750 CAPACITOR	CC 087.6787	VALVO	2222 678 57109	
C152	CC 10NF-20+50%7X8R4000 CAPACITOR	CC 087.7525	VALVO	2222 63051 64051103	
C153	CC 10NF-20+50%7X8R4000 CAPACITOR	CC 087.7525	VALVO	2222 63051 64051103	
C155	CK 220NF+-5%63V5RM MKT CAPACITOR	CK 099.2952	WIMA	MKS2/63/0,22UF/5%	
C156	CK 220NF+-5%63V5RM MKT CAPACITOR	CK 099.2952	WIMA	MKS2/63/0,22UF/5%	
C158	CK 100NF+-5%63V5RM MKT CAPACITOR	CK 099.2930	WIMA	MKS/2/63/0,1UF/5%	
C159	CC 10NF-20+50%7X8R4000 CAPACITOR	CC 087.7525	VALVO	2222 63051 64051103	
C160	CC 10NF-20+50%7X8R4000 CAPACITOR	CC 087.7525	VALVO	2222 63051 64051103	
C161	CC 10NF-20+50%7X8R4000 CAPACITOR	CC 087.7525	VALVO	2222 63051 64051103	
C164 ..165	CC 10NF-20+50%7X8R4000 CAPACITOR	CC 087.7525	VALVO	2222 63051 64051103	
C170	CC 10NF-20+50%7X8R4000 CAPACITOR	CC 087.7525	VALVO	2222 63051 64051103	
C180 ..185	CC 10NF-20+50%7X8R4000 CAPACITOR	CC 087.7525	VALVO	2222 63051 64051103	
C186	CC 8,2PF+-0,25PF3X4NP0 CAPACITOR	CC 087.6412	VALVO	2222 678 09828	
C187	CT 4PF N033 7S-03 TRIMMER	CT 087.7190	STETTNER	7S TRIKO 03	
C188	CC 3,9PF/0,25PF63V3X5N750 CAPACITOR	CC 099.5568	VALVO	2222 678 57398	
C189	CC 100PF+-2%6X9NP0 CAPACITOR	CC 087.6541	VALVO	2222 678 10101	
C190	CC 10NF-20+50%7X8R4000 CAPACITOR	CC 087.7525	VALVO	2222 63051 64051103	
C191	CT 15,5PF N750 ABGL OBEN DISC TRIMMER	CT 065.9677	STETTNER	7-STRIKO 03/4,5/20N7	
C193	CC 10NF-20+50%7X8R4000 CAPACITOR	CC 087.7525	VALVO	2222 63051 64051103	
C194	CC 180PF+- 5%100V NP0 VIE CERAMIC CAPACITOR	CC 060.0807	UNIONCARB	C052C181J2G1CA	
C195	CC 27PF+-2%4X5NP0 CAPACITOR	CC 087.6470	VALVO	2222 678 10279	
C196	CC 120PF+-2%6X9NP0 CAPACITOR	CC 087.6558	VALVO	2222 678 10121	

Für diese Unterlage behalten wir uns alle Rechte vor

Kennz. Comp.No.	Benennung Designation	Sachnummer Stock No.	Hersteller Manufacturer	Bezeichnung Designation	enthalten in contained in
C198	CT 15,5PF N750 ABGL OBEN DISC TRIMMER	CT 065.9677	STETTNER	7-STRIKO 03/4,5/20N7	
C199	CG 100PF+-2PF250VTKE MICA CAPACITOR	CG 023.1503	JAHRE	53-1/100PF/2PF/250	
C200	CC 10PF+-0,25PF3X4N750 CAPACITOR	CC 087.6787	VALVO	2222 678 57109	
C201	CC 10NF-20+50%7X8R4000 CAPACITOR	CC 087.7525	VALVO	2222 63051 64051103	
C202	CC 10NF-20+50%7X8R4000 CAPACITOR	CC 087.7525	VALVO	2222 63051 64051103	
C202	BO LF412CN 2XFET OPAMP OPERATIONAL AMPLIFIER	356.0521	NSC	LF412CN	F
C203	CC 10NF-20+50%7X8R4000 CAPACITOR	CC 087.7525	VALVO	2222 63051 64051103	
C204 ..211	CC 10NF-20+50%7X8R4000 CAPACITOR	CC 087.7525	VALVO	2222 63051 64051103	
C212	CT 4PF N033 7S-03 TRIMMER	CT 087.7190	STETTNER	7S TRIKO 03	
C213	CC 10NF-20+50%7X8R4000 CAPACITOR	CC 087.7525	VALVO	2222 63051 64051103	
C214	CC 4,7PF+-0,25PF3X4NPO CAPACITOR	CC 087.6387	VALVO	2222 678 09478	
C215	CC 10PF+-0,25PF3X4NPO CAPACITOR	CC 087.6429	VALVO	2222 678 09109	
C216	CC 10NF-20+50%7X8R4000 CAPACITOR	CC 087.7525	VALVO	2222 63051 64051103	
C217	CC 10NF-20+50%7X8R4000 CAPACITOR	CC 087.7525	VALVO	2222 63051 64051103	
C224	CC 68PF+-2%6X7NPO CAPACITOR	CC 087.6529	VALVO	2222 678 10689	
C225	CC 220PF+-2%6X7N750 CAPACITOR	CC 087.6941	VALVO	2222 678 58221	
C227 ..231	CC 10NF-20+50%7X8R4000 CAPACITOR	CC 087.7525	VALVO	2222 63051 64051103	
C234	CC 10NF-20+50%7X8R4000 CAPACITOR	CC 087.7525	VALVO	2222 63051 64051103	
C235	CC 10NF-20+50%7X8R4000 CAPACITOR	CC 087.7525	VALVO	2222 63051 64051103	
C236	CC 4,7PF+-0,25PF3X4NPO CAPACITOR	CC 087.6387	VALVO	2222 678 09478	
C237	CC 10PF+-0,25PF3X4NPO CAPACITOR	CC 087.6429	VALVO	2222 678 09109	
C238	CK 1UF+-10%50V5RM MKT CAPACITOR	CK 099.2998	WIMA	MKS2/50/1UF/10%	
C241 ..244	CC 10NF-20+50%7X8R4000 CAPACITOR	CC 087.7525	VALVO	2222 63051 64051103	
C245	CK 47NF+-5%63V5RM MKT CAPACITOR	CK 099.2917	WIMA	MKS2/63/0,047UF/5%	
C378	CC 10NF-20+50%7X8R4000 CAPACITOR	CC 087.7525	VALVO	2222 63051 64051103	
C379	CC 47NF+-10%50V5K1200VIEL CAPACITOR	CC 082.7810	UNION CARB	CK05BX473K	
C386	CC 10NF-20+50%7X8R4000 CAPACITOR	CC 087.7525	VALVO	2222 63051 64051103	
C390	CC 10NF-20+50%7X8R4000 CAPACITOR	CC 087.7525	VALVO	2222 63051 64051103	
C395	CC 10NF-20+50%7X8R4000 CAPACITOR	CC 087.7525	VALVO	2222 63051 64051103	
C398	CC 10NF-20+50%7X8R4000 CAPACITOR	CC 087.7525	VALVO	2222 63051 64051103	
D222	BL PC74HC377P 8XD-FF EN OCTAL D-FLIP-FLOP	BL 806.0045	VALVO	PC74HC377P	
D223	BL PC74HC377P 8XD-FF EN OCTAL D-FLIP-FLOP	BL 806.0045	VALVO	PC74HC377P	
D225	BJ MC1408L-8 8B.DA-CONV D/A-CONVERTER	BJ 280.9799	MOTOROLA	MC1408L-8	
D320	BJ TL604CP 2X ANALOGSCH ANALOG SWITCH	BJ 300.6199	TEXAS INST	TL604CP	
L1 ..4	LF ROHRK.NUR FUER FSA/U	805.5466	VALVO	----------	
L5	LD 0,27UH10%0,160HMO,975A CHOKE	LD 067.2792	DELEVAN	DROSSEL1025-06	
L6	LD 0,27UH10%0,160HMO,975A CHOKE	LD 067.2792	DELEVAN	DROSSEL1025-06	
L9	LD 22,0UH10%3,300HMO,114A CHOKE	LD 067.3024	DELEVAN	DROSSEL1025-52	

Kennz. Comp.No.	Benennung Designation	Sachnummer Stock No.	Hersteller Manufacturer	Bezeichnung Designation	enthalten in contained in
L10	LD 2,20UH10%0,400HMO,415A CHOKE	LD 067.2905	DELEVAN	DROSSEL1025-28	
L11	LD 100 UH10%8,000HMO,084A CHOKE	LD 067.3101	DELEVAN	DROSSEL1025-68	
L12	LD 10 UH 10% 3R3 144 MA CHOKE	LD 026.4184	DELEVAN	DROSSEL1025-44	
L13	LD 2,20UH10%0,400HMO,415A CHOKE	LD 067.2905	DELEVAN	DROSSEL1025-28	
L14	LD 15,0UH10%2,800HMO,157A CHOKE	LD 067.3001	DELEVAN	DROSSEL1025-48	
L15	LD 0,68UH10%0,600HMO,500A CHOKE	LD 067.2840	DELEVAN	DROSSEL1025-16	
L16	LC 400NH 9WDG.RD9,4XH19 COIL	805.5420	STETTNER	N.R&S.ZCHNG.805.5420	
L17	LD 1,50UH10%0,220HMO,560A CHOKE	LD 067.2886	DELEVAN	DROSSEL 1025-24	
L18	LD 1,50UH10%0,220HMO,560A CHOKE	LD 067.2886	DELEVAN	DROSSEL 1025-24	
L19	LD 22,0UH10%3,300HMO,114A CHOKE	LD 067.3024	DELEVAN	DROSSEL1025-52	
L20	LD 10 UH 10% 3R3 144 MA CHOKE	LD 026.4184	DELEVAN	DROSSEL1025-44	
L40 ..43	LF ROHRK.NUR FUER FSA/U	805.5466	VALVO	----------	
L44	LD 22,0UH10%3,300HMO,114A CHOKE	LD 067.3024	DELEVAN	DROSSEL1025-52	
L45	LD 5,60UH10%1,800HMO,195A CHOKE	LD 067.2957	DELEVAN	DROSSEL1025-38	
L46	LD 100 UH10%8,000HMO,084A CHOKE	LD 067.3101	DELEVAN	DROSSEL1025-68	
L47	LD 10 UH 10% 3R3 144 MA CHOKE	LD 026.4184	DELEVAN	DROSSEL1025-44	
L48	LD 2,20UH10%0,400HMO,415A CHOKE	LD 067.2905	DELEVAN	DROSSEL1025-28	
L49	LD 15,0UH10%2,800HMO,157A CHOKE	LD 067.3001	DELEVAN	DROSSEL1025-48	
L50	LD 0,68UH10%0,600HMO,500A CHOKE	LD 067.2840	DELEVAN	DROSSEL1025-16	
L51	LC 400NH 9WDG.RD9,4XH19 COIL	805.5420	STETTNER	N.R&S.ZCHNG.805.5420	
L52	LD 100 UH10%8,000HMO,084A CHOKE	LD 067.3101	DELEVAN	DROSSEL1025-68	
L53	LD 10 UH 10% 3R3 144 MA CHOKE	LD 026.4184	DELEVAN	DROSSEL1025-44	
L54	LF ROHRK.NUR FUER FSA/U	805.5466	VALVO	----------	
L55	LF ROHRK.NUR FUER FSA/U	805.5466	VALVO	----------	
L56	LD 1,00UH10%1,000HMO,390A CHOKE	LD 067.2863	DELEVAN	1025-20	
L58 ..61	LD 1,50UH10%0,220HMO,560A CHOKE	LD 067.2886	DELEVAN	DROSSEL 1025-24	
L62	LD 47,0UH10%4,500HMO,110A CHOKE	LD 067.3060	DELEVAN	DROSSEL1025-60	
L63	LD 47,0UH10%4,500HMO,110A CHOKE	LD 067.3060	DELEVAN	DROSSEL1025-60	
L100 ..103	LF ROHRK.NUR FUER FSA/U	805.5466	VALVO	----------	
L104	LD 100 UH10%8,000HMO,084A CHOKE	LD 067.3101	DELEVAN	DROSSEL1025-68	
L105	LD 2,20UH10%0,400HMO,415A CHOKE	LD 067.2905	DELEVAN	DROSSEL1025-28	
L106	LD 10 UH 10% 3R3 144 MA CHOKE	LD 026.4184	DELEVAN	DROSSEL1025-44	
L107	LD 2,20UH10%0,400HMO,415A CHOKE	LD 067.2905	DELEVAN	DROSSEL1025-28	
L108	LD 15,0UH10%2,800HMO,157A CHOKE	LD 067.3001	DELEVAN	DROSSEL1025-48	
L109	LD 0,68UH10%0,600HMO,500A CHOKE	LD 067.2840	DELEVAN	DROSSEL1025-16	
L110	LC 400NH 9WDG.RD9,4XH19 COIL	805.5420	STETTNER	N.R&S.ZCHNG.805.5420	
L111	LD 1,50UH10%0,220HMO,560A CHOKE	LD 067.2886	DELEVAN	DROSSEL 1025-24	
L112	LD 1,50UH10%0,220HMO,560A CHOKE	LD 067.2886	DELEVAN	DROSSEL 1025-24	
L113	LD 22,0UH10%3,300HMO,114A CHOKE	LD 067.3024	DELEVAN	DROSSEL1025-52	
L114	LD 22,0UH10%3,300HMO,114A CHOKE	LD 067.3024	DELEVAN	DROSSEL1025-52	

Für diese Unterlage behalten wir uns alle Rechte vor

Kennz. Comp.No.	Benennung Designation	Sachnummer Stock No.	Hersteller Manufacturer	Bezeichnung Designation	enthalten in contained in
L115	LD 10 UH 10% 3R3 144 MA CHOKE	LD 026.4184	DELEVAN	DROSSEL1025-44	
L130 ..133	LF ROHRK.NUR FUER FSA/U	805.5466	VALVO	----------	
L134	LD 22,0UH10%3,300HMO,114A CHOKE	LD 067.3024	DELEVAN	DROSSEL1025-52	
L135	LD 5,60UH10%1,800HMO,195A CHOKE	LD 067.2957	DELEVAN	DROSSEL1025-38	
L136	LD 100 UH10%8,000HMO,084A CHOKE	LD 067.3101	DELEVAN	DROSSEL1025-68	
L137	LD 10 UH 10% 3R3 144 MA CHOKE	LD 026.4184	DELEVAN	DROSSEL1025-44	
L138	LD 2,20UH10%0,400HMO,415A CHOKE	LD 067.2905	DELEVAN	DROSSEL1025-28	
L139	LD 15,0UH10%2,800HMO,157A CHOKE	LD 067.3001	DELEVAN	DROSSEL1025-48	
L140	LD 0,68UH10%0,600HMO,500A CHOKE	LD 067.2840	DELEVAN	DROSSEL1025-16	
L141	LC 400NH 9WDG.RD9,4XH19 COIL	805.5420	STETTNER	N.R&S.ZCHNG.805.5420	
L142	LD 1,50UH10%0,220HMO,560A CHOKE	LD 067.2886	DELEVAN	DROSSEL 1025-24	
L143	LD 1,50UH10%0,220HMO,560A CHOKE	LD 067.2886	DELEVAN	DROSSEL 1025-24	
L144	LD 1,50UH10%0,220HMO,560A CHOKE	LD 067.2886	DELEVAN	DROSSEL 1025-24	
L145	LD 1,50UH10%0,220HMO,560A CHOKE	LD 067.2886	DELEVAN	DROSSEL 1025-24	
L146	LD 47,0UH10%4,500HMO,110A CHOKE	LD 067.3060	DELEVAN	DROSSEL1025-60	
L147	LD 47,0UH10%4,500HMO,110A CHOKE	LD 067.3060	DELEVAN	DROSSEL1025-60	
L179 ..182	LF ROHRK.NUR FUER FSA/U	805.5466	VALVO	----------	
L183	LD 22,0UH10%3,300HMO,114A CHOKE	LD 067.3024	DELEVAN	DROSSEL1025-52	
L184	LD 22,0UH10%3,300HMO,114A CHOKE	LD 067.3024	DELEVAN	DROSSEL1025-52	
L185	LD 5,60UH10%1,800HMO,195A CHOKE	LD 067.2957	DELEVAN	DROSSEL1025-38	
L186	LD 100 UH10%8,000HMO,084A CHOKE	LD 067.3101	DELEVAN	DROSSEL1025-68	
L187	LD 10 UH 10% 3R3 144 MA CHOKE	LD 026.4184	DELEVAN	DROSSEL1025-44	
L188	LD 2,20UH10%0,400HMO,415A CHOKE	LD 067.2905	DELEVAN	DROSSEL1025-28	
L189	LD 15,0UH10%2,800HMO,157A CHOKE	LD 067.3001	DELEVAN	DROSSEL1025-48	
L190	LD 0,68UH10%0,600HMO,500A CHOKE	LD 067.2840	DELEVAN	DROSSEL1025-16	
L191	LC 400NH 9WDG.RD9,4XH19 COIL	805.5420	STETTNER	N.R&S.ZCHNG.805.5420	
L192	LD 1,50UH10%0,220HMO,560A CHOKE	LD 067.2886	DELEVAN	DROSSEL 1025-24	
L193	LD 1,50UH10%0,220HMO,560A CHOKE	LD 067.2886	DELEVAN	DROSSEL 1025-24	
L194	LD 4,70UH10%1,200HMO,239A CHOKE	LD 067.2940	DELEVAN	DROSSEL1025-36	
L197	LD 100 UH10%8,000HMO,084A CHOKE	LD 067.3101	DELEVAN	DROSSEL1025-68	
L198	LF ROHRK.NUR FUER FSA/U	805.5466	VALVO	----------	
L199	LF ROHRK.NUR FUER FSA/U	805.5466	VALVO	----------	
L220	LD 1,20UH10%0,180HMO,620A CHOKE	LD 067.2870	DELEVAN	DROSSEL1025-22	
L221	LD 1,20UH10%0,180HMO,620A CHOKE	LD 067.2870	DELEVAN	DROSSEL1025-22	
L222	LD 1,20UH10%0,180HMO,620A CHOKE	LD 067.2870	DELEVAN	DROSSEL1025-22	
L223	LD 10 UH 10% 3R3 144 MA CHOKE	LD 026.4184	DELEVAN	DROSSEL1025-44	
L381	LF ROHRK.NUR FUER FSA/U	805.5466	VALVO	----------	
L395	LF ROHRK.NUR FUER FSA/U	805.5466	VALVO	----------	
L398	LD 6,80UH10%2,000HMO,185A CHOKE	LD 026.4178	DELEVAN	DROSSEL1025-40	
L399	LD 100 UH10%8,000HMO,084A CHOKE	LD 067.3101	DELEVAN	DROSSEL1025-68	
L401	LD 47,0UH10%4,500HMO,110A CHOKE	LD 067.3060	DELEVAN	DROSSEL1025-60	

Kennz. Comp.No.	Benennung Designation	Sachnummer Stock No.	Hersteller Manufacturer	Bezeichnung Designation	enthalten in contained in
N10	BO LM124J 4XL.P.OPAMP OPERATIONAL AMPLIFIER	300.6353	NSC	LM124J	
N11	BO LF412CN 2XFET OPAMP OPERATIONAL AMPLIFIER	356.0521	NSC	LF412CN	
N100	BO LM124J 4XL.P.OPAMP OPERATIONAL AMPLIFIER	300.6353	NSC	LM124J	
N101	BO LM124J 4XL.P.OPAMP OPERATIONAL AMPLIFIER	300.6353	NSC	LM124J	
N180	BO LF156J BIFET OPAMP OPERATIONAL AMPLIFIER	BO 645.7251	MOTOROLA	LF156J	
N200	BO LM124J 4XL.P.OPAMP OPERATIONAL AMPLIFIER	300.6353	NSC	LM124J	
N201	BO LF412CN 2XFET OPAMP OPERATIONAL AMPLIFIER	356.0521	NSC	LF412CN	
R1	RL 0,35W 511 OHM+-1%TK50 RESISTOR	RL 083.0426	DRALORIC	SMA0207/511OHM-F-D	
R2	RL 0,35W 47,5 OHM+-1%TK50 RESISTOR	RL 082.9507	DRALORIC	SMA0207/47,5OHM-F-D	
R3	RL 0,35W 5,62KOHM+-1%TK50 RESISTOR	RL 082.2190	DRALORIC	SMA0207/5,62K-F-C	
R4	RL 0,35W 8,25KOHM+-1%TK50 RESISTOR	RL 083.1239	DRALORIC	SMA0207/8,25K-F-D	
R5	RL 0,35W 56,2 OHM+-1%TK50 RESISTOR	RL 082.9571	DRALORIC	SMA0207/56,2OHM-F-D	
R6	RL 0,35W 100 OHM+-1%TK50 METALFILM-RESISTOR	RL 082.6543	DRALORIC	SMA0207/100/HM-F-D	
R7	RL 0,35W 243 OHM+-1%TK50 DEPOS.-CARBON RESISTOR	RL 083.0126	DRALORIC	SMA0207/243OHM-F-D	
R8	RL 0,35W 332 OHM+-1%TK50 RESISTOR	RL 083.0255	DRALORIC	SMA0207/332OHM-F-D	
R9	RL 0,35W 121 OHM+-1%TK50 RESISTOR	RL 082.9859	DRALORIC	SMA0207/121OHM-F-D	
R10	RL 0,35W 8,25KOHM+-1%TK50 RESISTOR	RL 083.1239	DRALORIC	SMA0207/8,25K-F-D	
R11	RL 0,35W 8,25KOHM+-1%TK50 RESISTOR	RL 083.1239	DRALORIC	SMA0207/8,25K-F-D	
R12	RL 0,35W 332 OHM+-1%TK50 RESISTOR	RL 083.0255	DRALORIC	SMA0207/332OHM-F-D	
R13	RL 0,35W 301 OHM+-1%TK50 RESISTOR	RL 083.0210	DRALORIC	SMA0207/301OHM-F-D	
R14	RL 0,35W 3,32KOHM+-1%TK50 RESISTOR	RL 083.0990	DRALORIC	SMA0207/3,32K-F-D	
R15	RL 0,35W 100 OHM+-1%TK50 METALFILM-RESISTOR	RL 082.6543	DRALORIC	SMA0207/100/HM-F-D	
R18	RL 0,35W 15,0KOHM+-1%TK50 RESISTOR	RL 083.1400	DRALORIC	SMA0207/15K-F-D	
R19	RL 0,35W 47,5 OHM+-1%TK50 RESISTOR	RL 082.9507	DRALORIC	SMA0207/47,5OHM-F-D	
R20	RL 0,35W 681 OHM+-1%TK50 RESISTOR	RL 083.0490	DRALORIC	SMA0207/681OHM-F-D	
R22	RL 0,35W 432 OHM+-1%TK50 DEPOS.-CARBON RESISTOR	RL 083.0355	DRALORIC	SMA0207/432OHM-F-D	
R23	RL 0,35W 1KOHM+-1%TK50 RESISTOR	RL 082.2160	DRALORIC	SMA0207/1K-F-C	
R24	RL 0,35W 4,75KOHM+-1%TK50 RESISTOR	RL 083.1097	DRALORIC	SMA0207/4,75K-F-D	
R25	RL 0,35W 15,0KOHM+-1%TK50 RESISTOR	RL 083.1400	DRALORIC	SMA0207/15K-F-D	
R26	RL 0,35W 12,1KOHM+-1%TK50 RESISTOR	RL 083.1351	DRALORIC	SMA0207/12,1K-F-D	
R27	RL 0,35W 15,0KOHM+-1%TK50 RESISTOR	RL 083.1400	DRALORIC	SMA0207/15K-F-D	
R28	RL 0,35W 22,1KOHM+-1%TK50 RESISTOR	RL 083.1545	DRALORIC	SMA/207/22,1K-F-C	
R29	RL 0,35W 1,78KOHM+-1%TK50 RESISTOR	RL 082.6643	DRALORIC	SMA0207/1,78K-F-D	
R30	RL 0,35W 8,25KOHM+-1%TK50 RESISTOR	RL 083.1239	DRALORIC	SMA0207/8,25K-F-D	
R31	RL 0,35W 1,82KOHM+-1%TK50 RESISTOR	RL 082.2277	DRALORIC	SMA0207/1,82K-F-C	
R32	RL 0,35W 8,25KOHM+-1%TK50 RESISTOR	RL 083.1239	DRALORIC	SMA0207/8,25K-F-D	
R33	RL 0,35W 3,32KOHM+-1%TK50 RESISTOR	RL 083.0990	DRALORIC	SMA0207/3,32K-F-D	
R34	RL 0,35W 15,0KOHM+-1%TK50 RESISTOR	RL 083.1400	DRALORIC	SMA0207/15K-F-D	

Für diese Unterlage behalten wir uns alle Rechte vor

Kennz. Comp.No.	Benennung Designation	Sachnummer Stock No.	Hersteller Manufacturer	Bezeichnung Designation	enthalten in contained in
R35	RL 0,35W3,28KOHM+-0,1%T25 RESISTOR	RL 084.2139	DRALORIC	SMA0207/3,28K-B-E	
R36	RL 0,35W 15,0KOHM+-1%TK50 RESISTOR	RL 083.1400	DRALORIC	SMA0207/15K-F-D	
R37	RL 0,35W 10,0KOHM+-1%TK50 RESISTOR	RL 083.1297	DRALORIC	SMA0207/10K-F-D	
R40	RL 0,35W 68,1 OHM+-1%TK50 RESISTOR	RL 082.9636	DRALORIC	SMA0207/68,1OHM-F-D	
R41	RS 0,3W 100 OHM+-10%CERM. TRIMMING POTENTIOMETER	RS 006.6652	BOURNS	3296W-1- 100OHM+-10%	
R42	RL 0,35W 243 OHM+-1%TK50 DEPOS.-CARBON RESISTOR	RL 083.0126	DRALORIC	SMA0207/243OHM-F-D	
R43	RL 0,35W 475 OHM+-1%TK50 RESISTOR	RL 083.0390	DRALORIC	SMA0207/475OHM-F-D	
R44	RL 0,35W 332 OHM+-1%TK50 RESISTOR	RL 083.0255	DRALORIC	SMA0207/332OHM-F-D	
R45	RL 0,35W 121 OHM+-1%TK50 RESISTOR	RL 082.9859	DRALORIC	SMA0207/121OHM-F-D	
R46	RL 0,35W 8,25KOHM+-1%TK50 RESISTOR	RL 083.1239	DRALORIC	SMA0207/8,25K-F-D	
R47	RL 0,35W 1KOHM+-1%TK50 RESISTOR	RL 082.2160	DRALORIC	SMA0207/1K-F-C	
R48	RL 0,35W 8,25KOHM+-1%TK50 RESISTOR	RL 083.1239	DRALORIC	SMA0207/8,25K-F-D	
R49	RL 0,35W 3,32KOHM+-1%TK50 RESISTOR	RL 083.0990	DRALORIC	SMA0207/3,32K-F-D	
R50	RL 0,35W 332 OHM+-1%TK50 RESISTOR	RL 083.0255	DRALORIC	SMA0207/332OHM-F-D	
R51	RL 0,35W 301 OHM+-1%TK50 RESISTOR	RL 083.0210	DRALORIC	SMA0207/301OHM-F-D	
R52	RL 0,35W 100 OHM+-1%TK50 METALFILM-RESISTOR	RL 082.6543	DRALORIC	SMA0207/100/HM-F-D	
R53	RL 0,35W 15,0KOHM+-1%TK50 RESISTOR	RL 083.1400	DRALORIC	SMA0207/15K-F-D	
R56	RL 0,35W 432 OHM+-1%TK50 DEPOS.-CARBON RESISTOR	RL 083.0355	DRALORIC	SMA0207/432OHM-F-D	
R62	RL 0,35W 47,5 OHM+-1%TK50 RESISTOR	RL 082.9507	DRALORIC	SMA0207/47,5OHM-F-D	
R64	RL 0,35W 4,75KOHM+-1%TK50 RESISTOR	RL 083.1097	DRALORIC	SMA0207/4,75K-F-D	
R65	RL 0,35W 15,0KOHM+-1%TK50 RESISTOR	RL 083.1400	DRALORIC	SMA0207/15K-F-D	
R66	RL 0,35W 12,1KOHM+-1%TK50 RESISTOR	RL 083.1351	DRALORIC	SMA0207/12,1K-F-D	
R67	RL 0,35W 15,0KOHM+-1%TK50 RESISTOR	RL 083.1400	DRALORIC	SMA0207/15K-F-D	
R68	RL 0,35W 562 OHM+-1%TK50 RESISTOR	RL 083.0461	DRALORIC	SMA0207/562OHM-F-D	
R69	RL 0,35W 15,0KOHM+-1%TK50 RESISTOR	RL 083.1400	DRALORIC	SMA0207/15K-F-D	
R70	RL 0,35W 332 OHM+-1%TK50 RESISTOR	RL 083.0255	DRALORIC	SMA0207/332OHM-F-D	
R71	RL 0,35W 68,1 OHM+-1%TK50 RESISTOR	RL 082.9636	DRALORIC	SMA0207/68,1OHM-F-D	
R72	RL 0,35W 100 OHM+-1%TK50 METALFILM-RESISTOR	RL 082.6543	DRALORIC	SMA0207/100/HM-F-D	
R74	RL 0,35W 121 OHM+-1%TK50 RESISTOR	RL 082.9859	DRALORIC	SMA0207/121OHM-F-D	
R76	RL 0,35W 681 OHM+-1%TK50 RESISTOR	RL 083.0490	DRALORIC	SMA0207/681OHM-F-D	
R83	RL 0,35W 15,0KOHM+-1%TK50 RESISTOR	RL 083.1400	DRALORIC	SMA0207/15K-F-D	
R84	RL 0,35W 15,0KOHM+-1%TK50 RESISTOR	RL 083.1400	DRALORIC	SMA0207/15K-F-D	
R85	RL 0,35W 10,0KOHM+-1%TK50 RESISTOR	RL 083.1297	DRALORIC	SMA0207/10K-F-D	
R86	RL 0,35W 10,0KOHM+-1%TK50 RESISTOR	RL 083.1297	DRALORIC	SMA0207/10K-F-D	
R87	RL 0,35W 1KOHM+-1%TK50 RESISTOR	RL 082.2160	DRALORIC	SMA0207/1K-F-C	
R88	RL 0,35W 1,78KOHM+-1%TK50 RESISTOR	RL 082.6643	DRALORIC	SMA0207/1,78K-F-D	
R89	RL 0,35W 8,25KOHM+-1%TK50 RESISTOR	RL 083.1239	DRALORIC	SMA0207/8,25K-F-D	
R90	RL 0,35W 1,82KOHM+-1%TK50 RESISTOR	RL 082.2277	DRALORIC	SMA0207/1,82K-F-C	
R91	RL 0,35W 8,25KOHM+-1%TK50 RESISTOR	RL 083.1239	DRALORIC	SMA0207/8,25K-F-D	

Kennz. Comp.No.	Benennung Designation	Sachnummer Stock No.	Hersteller Manufacturer	Bezeichnung Designation	enthalten in contained in
R92	RL 0,35W 10,0KOHM+-1%TK50 RESISTOR	RL 083.1297	DRALORIC	SMA0207/10K-F-D	
R93	RS 0,3W2,0KOHM+-10%CERMET TRIMMING POTENTIOMETER	RS 006.9139	BECKMAN	67W 2KOHM 10%	
R94	RS 0,3W2,0KOHM+-10%CERMET TRIMMING POTENTIOMETER	RS 006.9139	BECKMAN	67W 2KOHM 10%	
R95	RL 0,35W 432 OHM+-1%TK50 DEPOS.-CARBON RESISTOR	RL 083.0355	DRALORIC	SMA0207/432OHM-F-D	
R96	RL 0,35W 3,32KOHM+-1%TK50 RESISTOR	RL 083.0990	DRALORIC	SMA0207/3,32K-F-D	
R97	RL 0,35W 15,0KOHM+-1%TK50 RESISTOR	RL 083.1400	DRALORIC	SMA0207/15K-F-D	
R98	RL 0,35W3,28KOHM+-0,1%T25 RESISTOR	RL 084.2139	DRALORIC	SMA0207/3,28K-B-E	
R99	RL 0,35W 15,0KOHM+-1%TK50 RESISTOR	RL 083.1400	DRALORIC	SMA0207/15K-F-D	
R100	RL 0,35W 5,62KOHM+-1%TK50 RESISTOR	RL 082.2190	DRALORIC	SMA0207/5,62K-F-C	
R101	RL 0,35W 8,25KOHM+-1%TK50 RESISTOR	RL 083.1239	DRALORIC	SMA0207/8,25K-F-D	
R102	RL 0,35W 47,5 OHM+-1%TK50 RESISTOR	RL 082.9507	DRALORIC	SMA0207/47,5OHM-F-D	
R103	RL 0,35W 182 OHM+-1%TK50 RESISTOR	RL 083.0010	DRALORIC	SMA0207/182OHM-F-D	
R104	RL 0,35W 100 OHM+-1%TK50 METALFILM-RESISTOR	RL 082.6543	DRALORIC	SMA0207/100/HM-F-D	
R105	RL 0,35W 150 OHM+-1%TK50 RESISTOR	RL 082.9942	DRALORIC	SMA0207/150OHM-F-D	
R106	RL 0,35W 121 OHM+-1%TK50 RESISTOR	RL 082.9859	DRALORIC	SMA0207/121OHM-F-D	
R107	RL 0,35W 332 OHM+-1%TK50 RESISTOR	RL 083.0255	DRALORIC	SMA0207/332OHM-F-D	
R108	RL 0,35W 8,25KOHM+-1%TK50 RESISTOR	RL 083.1239	DRALORIC	SMA0207/8,25K-F-D	
R109	RL 0,35W 8,25KOHM+-1%TK50 RESISTOR	RL 083.1239	DRALORIC	SMA0207/8,25K-F-D	
R110	RL 0,35W 301 OHM+-1%TK50 RESISTOR	RL 083.0210	DRALORIC	SMA0207/301OHM-F-D	
R111	RL 0,35W 3,32KOHM+-1%TK50 RESISTOR	RL 083.0990	DRALORIC	SMA0207/3,32K-F-D	
R112	RL 0,35W 332 OHM+-1%TK50 RESISTOR	RL 083.0255	DRALORIC	SMA0207/332OHM-F-D	
R113	RL 0,35W 100 OHM+-1%TK50 METALFILM-RESISTOR	RL 082.6543	DRALORIC	SMA0207/100/HM-F-D	
R116	RL 0,35W 47,5 OHM+-1%TK50 RESISTOR	RL 082.9507	DRALORIC	SMA0207/47,5OHM-F-D	
R117	RL 0,35W 392 KOHM+-1%TK50 RESISTOR	RL 083.2512	DRALORIC	SMA0207/392K-F-C	
R119	RL 0,35W 4,75KOHM+-1%TK50 RESISTOR	RL 083.1097	DRALORIC	SMA0207/4,75K-F-D	
R120	RL 0,35W 15,0KOHM+-1%TK50 RESISTOR	RL 083.1400	DRALORIC	SMA0207/15K-F-D	
R121	RL 0,35W 12,1KOHM+-1%TK50 RESISTOR	RL 083.1351	DRALORIC	SMA0207/12,1K-F-D	
R122	RL 0,35W 15,0KOHM+-1%TK50 RESISTOR	RL 083.1400	DRALORIC	SMA0207/15K-F-D	
R123	RL 0,35W 562 OHM+-1%TK50 RESISTOR	RL 083.0461	DRALORIC	SMA0207/562OHM-F-D	
R125	RL 0,35W 47,5 OHM+-1%TK50 RESISTOR	RL 082.9507	DRALORIC	SMA0207/47,5OHM-F-D	
R130	RL 0,35W 432 OHM+-1%TK50 DEPOS.-CARBON RESISTOR	RL 083.0355	DRALORIC	SMA0207/432OHM-F-D	
R131	RL 0,35W 68,1 OHM+-1%TK50 RESISTOR	RL 082.9636	DRALORIC	SMA0207/68,1OHM-F-D	
R132	RS 0,3W 100 OHM+-10%CERM. TRIMMING POTENTIOMETER	RS 006.6652	BOURNS	3296W-1- 100OHM+-10%	
R133	RL 0,35W 475 OHM+-1%TK50 RESISTOR	RL 083.0390	DRALORIC	SMA0207/475OHM-F-D	
R134	RL 0,35W 182 OHM+-1%TK50 RESISTOR	RL 083.0010	DRALORIC	SMA0207/182OHM-F-D	
R135	RL 0,35W 150 OHM+-1%TK50 RESISTOR	RL 082.9942	DRALORIC	SMA0207/150OHM-F-D	
R136	RL 0,35W 8,25KOHM+-1%TK50 RESISTOR	RL 083.1239	DRALORIC	SMA0207/8,25K-F-D	
R137	RL 0,35W 332 OHM+-1%TK50 RESISTOR	RL 083.0255	DRALORIC	SMA0207/332OHM-F-D	
R138	RL 0,35W 100 OHM+-1%TK50 METALFILM-RESISTOR	RL 082.6543	DRALORIC	SMA0207/100/HM-F-D	

Für diese Unterlage behalten wir uns alle Rechte vor

Kennz. Comp.No.	Benennung Designation	Sachnummer Stock No.	Hersteller Manufacturer	Bezeichnung Designation	enthalten in contained in
R139	RL 0,35W 22,1KOHM+-1%TK50 RESISTOR	RL 083.1545	DRALORIC	SMA/207/22,1K-F-C	
R140	RL 0,35W 121 OHM+-1%TK50 RESISTOR	RL 082.9859	DRALORIC	SMA0207/1210HM-F-D	
R141	RL 0,35W 8,25KOHM+-1%TK50 RESISTOR	RL 083.1239	DRALORIC	SMA0207/8,25K-F-D	
R142	RL 0,35W 301 OHM+-1%TK50 RESISTOR	RL 083.0210	DRALORIC	SMA0207/3010HM-F-D	
R143	RL 0,35W 3,32KOHM+-1%TK50 RESISTOR	RL 083.0990	DRALORIC	SMA0207/3,32K-F-D	
R144	RL 0,35W 562 OHM+-1%TK50 RESISTOR	RL 083.0461	DRALORIC	SMA0207/5620HM-F-D	
R145	RL 0,35W 1KOHM+-1%TK50 RESISTOR	RL 082.2160	DRALORIC	SMA0207/1K-F-C	
R146	RL 0,35W 4,75KOHM+-1%TK50 RESISTOR	RL 083.1097	DRALORIC	SMA0207/4,75K-F-D	
R147	RL 0,35W 15,0KOHM+-1%TK50 RESISTOR	RL 083.1400	DRALORIC	SMA0207/15K-F-D	
R148	RL 0,35W 12,1KOHM+-1%TK50 RESISTOR	RL 083.1351	DRALORIC	SMA0207/12,1K-F-D	
R149	RL 0,35W 15,0KOHM+-1%TK50 RESISTOR	RL 083.1400	DRALORIC	SMA0207/15K-F-D	
R150	RL 0,35W 562 OHM+-1%TK50 RESISTOR	RL 083.0461	DRALORIC	SMA0207/5620HM-F-D	
R153	RL 0,35W 47,5 OHM+-1%TK50 RESISTOR	RL 082.9507	DRALORIC	SMA0207/47,50HM-F-D	
R154	RL 0,35W 15,0KOHM+-1%TK50 RESISTOR	RL 083.1400	DRALORIC	SMA0207/15K-F-D	
R155	RL 0,35W 15,0KOHM+-1%TK50 RESISTOR	RL 083.1400	DRALORIC	SMA0207/15K-F-D	
R156	RL 0,35W 10,0KOHM+-1%TK50 RESISTOR	RL 083.1297	DRALORIC	SMA0207/10K-F-D	
R157	RL 0,35W 10,0KOHM+-1%TK50 RESISTOR	RL 083.1297	DRALORIC	SMA0207/10K-F-D	
R158	RL 0,35W3,88KOHM+-0,1%T25 RESISTOR	RL 084.2274	DRALORIC	SMA0207	
R159	RL 0,35W 18,2KOHM+-1%TK50 RESISTOR	RL 083.1480	DRALORIC	SMA/207/18,2K-F-C	
R160	RL 0,35W 3,92KOHM+-1%TK50 RESISTOR	RL 083.1039	RESISTA	MK2	
R161	RL 0,35W 18,2KOHM+-1%TK50 RESISTOR	RL 083.1480	DRALORIC	SMA/207/18,2K-F-C	
R162	RL 0,35W 10,0KOHM+-1%TK50 RESISTOR	RL 083.1297	DRALORIC	SMA0207/10K-F-D	
R163	RL 0,35W 82,5 OHM+-1%TK50 RESISTOR	RL 082.9707	DRALORIC	SMA0207/82,50HM-F-D	
R164	RS 0,3W2,0KOHM+-10%CERMET TRIMMING POTENTIOMETER	RS 006.9139	BECKMAN	67W 2KOHM 10%	
R165	RL 0,35W 3,32KOHM+-1%TK50 RESISTOR	RL 083.0990	DRALORIC	SMA0207/3,32K-F-D	
R166	RL 0,35W 15,0KOHM+-1%TK50 RESISTOR	RL 083.1400	DRALORIC	SMA0207/15K-F-D	
R167	RL 0,35W3,28KOHM+-0,1%T25 RESISTOR	RL 084.2139	DRALORIC	SMA0207/3,28K-B-E	
R168	RL 0,35W 15,0KOHM+-1%TK50 RESISTOR	RL 083.1400	DRALORIC	SMA0207/15K-F-D	
R169	RL 0,35W3,88KOHM+-0,1%T25 RESISTOR	RL 084.2274	DRALORIC	SMA0207	
R170	RL 0,35W 18,2KOHM+-1%TK50 RESISTOR	RL 083.1480	DRALORIC	SMA/207/18,2K-F-C	
R171	RL 0,35W 3,92KOHM+-1%TK50 RESISTOR	RL 083.1039	RESISTA	MK2	
R172	RL 0,35W 18,2KOHM+-1%TK50 RESISTOR	RL 083.1480	DRALORIC	SMA/207/18,2K-F-C	
R173	RL 0,35W 10,0KOHM+-1%TK50 RESISTOR	RL 083.1297	DRALORIC	SMA0207/10K-F-D	
R174	RS 0,3W2,0KOHM+-10%CERMET TRIMMING POTENTIOMETER	RS 006.9139	BECKMAN	67W 2KOHM 10%	
R175	RL 0,35W 3,32KOHM+-1%TK50 RESISTOR	RL 083.0990	DRALORIC	SMA0207/3,32K-F-D	
R176	RL 0,35W 15,0KOHM+-1%TK50 RESISTOR	RL 083.1400	DRALORIC	SMA0207/15K-F-D	
R177	RL 0,35W3,28KOHM+-0,1%T25 RESISTOR	RL 084.2139	DRALORIC	SMA0207/3,28K-B-E	
R178	RL 0,35W 15,0KOHM+-1%TK50 RESISTOR	RL 083.1400	DRALORIC	SMA0207/15K-F-D	
R180	RL 0,35W 432 OHM+-1%TK50 DEPOS.-CARBON RESISTOR	RL 083.0355	DRALORIC	SMA0207/4320HM-F-D	

ROHDE & SCHWARZ	Äl	Datum Date	Schaltteilliste für Parts list for	Sachnummer Stock Nr.	Blatt Page
	13	1088	EE IF-FILTER 1	805.5337.01 SA	10+

Kennz. Comp.No.	Benennung Designation	Sachnummer Stock No.	Hersteller Manufacturer	Bezeichnung Designation	enthalten in contained in
R181	RL 0,35W 68,1 OHM+-1%TK50 RESISTOR	RL 082.9636	DRALORIC	SMA0207/68,1OHM-F-D	
R182	RL 0,35W 56,2 OHM+-1%TK50 RESISTOR	RL 082.9571	DRALORIC	SMA0207/56,2OHM-F-D	
R183	RL 0,35W 475 OHM+-1%TK50 RESISTOR	RL 083.0390	DRALORIC	SMA0207/475OHM-F-D	
R184	RL 0,35W 182 OHM+-1%TK50 RESISTOR	RL 083.0010	DRALORIC	SMA0207/182OHM-F-D	
R185	RL 0,35W 150 OHM+-1%TK50 RESISTOR	RL 082.9942	DRALORIC	SMA0207/150OHM-F-D	
R186	RL 0,35W 121 OHM+-1%TK50 RESISTOR	RL 082.9859	DRALORIC	SMA0207/121OHM-F-D	
R187	RL 0,35W 8,25KOHM+-1%TK50 RESISTOR	RL 083.1239	DRALORIC	SMA0207/8,25K-F-D	
R188	RL 0,35W 562 OHM+-1%TK50 RESISTOR	RL 083.0461	DRALORIC	SMA0207/562OHM-F-D	
R189	RL 0,35W 8,25KOHM+-1%TK50 RESISTOR	RL 083.1239	DRALORIC	SMA0207/8,25K-F-D	
R190	RL 0,35W 3,32KOHM+-1%TK50 RESISTOR	RL 083.0990	DRALORIC	SMA0207/3,32K-F-D	
R191	RL 0,35W 301 OHM+-1%TK50 RESISTOR	RL 083.0210	DRALORIC	SMA0207/301OHM-F-D	
R192	RL 0,35W 332 OHM+-1%TK50 RESISTOR	RL 083.0255	DRALORIC	SMA0207/332OHM-F-D	
R193	RL 0,35W 100 OHM+-1%TK50 METALFILM-RESISTOR	RL 082.6543	DRALORIC	SMA0207/100/HM-F-D	
R194	RL 0,35W 10,0 OHM+-1%TK50 RESISTOR	RL 082.8852	DRALORIC	SMA0207/100HM-F-D	
R195	RL 0,35W 10,0KOHM+-1%TK50 RESISTOR	RL 083.1297	DRALORIC	SMA0207/10K-F-D	
R197	RL 0,35W 47,5 OHM+-1%TK50 RESISTOR	RL 082.9507	DRALORIC	SMA0207/47,5OHM-F-D	
R199	RL 0,35W 4,75KOHM+-1%TK50 RESISTOR	RL 083.1097	DRALORIC	SMA0207/4,75K-F-D	
R200	RL 0,35W 15,0KOHM+-1%TK50 RESISTOR	RL 083.1400	DRALORIC	SMA0207/15K-F-D	
R201	RL 0,35W 12,1KOHM+-1%TK50 RESISTOR	RL 083.1351	DRALORIC	SMA0207/12,1K-F-D	
R202	RL 0,35W 15,0KOHM+-1%TK50 RESISTOR	RL 083.1400	DRALORIC	SMA0207/15K-F-D	
R203	RL 0,35W 3,92KOHM+-1%TK50 RESISTOR	RL 083.1039	RESISTA	MK2	
R204	RL 0,35W 22,1KOHM+-1%TK50 RESISTOR	RL 083.1545	DRALORIC	SMA/207/22,1K-F-C	
R207	RL 0,35W 100 OHM+-1%TK50 METALFILM-RESISTOR	RL 082.6543	DRALORIC	SMA0207/100/HM-F-D	
R210	RL 0,35W 75,0 OHM+-1%TK50 RESISTOR	RL 082.9665	DRALORIC	SMA0207/750HM-F-D	
R212	RL 0,35W 332 OHM+-1%TK50 RESISTOR	RL 083.0255	DRALORIC	SMA0207/332OHM-F-D	
R213	RL 0,35W 1,21KOHM+-1%TK50 RESISTOR	RL 083.0655	DRALORIC	SMA0207/1,21K-F-D	
R214	RL 0,35W 332 KOHM+-1%TK50 RESISTOR	RL 083.2441	DRALORIC	SMA0207/332K-F-C	
R215	RL 0,35W 332 KOHM+-1%TK50 RESISTOR	RL 083.2441	DRALORIC	SMA0207/332K-F-C	
R216	RL 0,35W 1,21KOHM+-1%TK50 RESISTOR	RL 083.0655	DRALORIC	SMA0207/1,21K-F-D	
R219	RL 0,35W 100 OHM+-1%TK50 METALFILM-RESISTOR	RL 082.6543	DRALORIC	SMA0207/100/HM-F-D	
R230	RL 0,35W 1KOHM+-1%TK50 RESISTOR	RL 082.2160	DRALORIC	SMA0207/1K-F-C	
R240	RL 0,35W 5,62KOHM+-1%TK50 RESISTOR	RL 082.2190	DRALORIC	SMA0207/5,62K-F-C	
R241	RL 0,35W 5,62KOHM+-1%TK50 RESISTOR	RL 082.2190	DRALORIC	SMA0207/5,62K-F-C	
R242	RL 0,35W 5,62KOHM+-1%TK50 RESISTOR	RL 082.2190	DRALORIC	SMA0207/5,62K-F-C	
R246	RL 0,35W 68,1KOHM+-1%TK50 RESISTOR	RL 082.2602	DRALORIC	SMA 0207/68,1K-F-C	
R247	RL 0,35W 8,25KOHM+-1%TK50 RESISTOR	RL 083.1239	DRALORIC	SMA0207/8,25K-F-D	
R248	RL 0,35W 10,0KOHM+-1%TK50 RESISTOR	RL 083.1297	DRALORIC	SMA0207/10K-F-D	
R249	RL 0,35W 4,75KOHM+-1%TK50 RESISTOR	RL 083.1097	DRALORIC	SMA0207/4,75K-F-D	
R250	RL 0,35W 4,75KOHM+-1%TK50 RESISTOR	RL 083.1097	DRALORIC	SMA0207/4,75K-F-D	

Für diese Unterlage behalten wir uns alle Rechte vor

Kennz. Comp.No.	Benennung Designation	Sachnummer Stock No.	Hersteller Manufacturer	Bezeichnung Designation	enthalten in contained in
R251	RL 0,35W 10,0KOHM+-1%TK50 RESISTOR	RL 083.1297	DRALORIC	SMA0207/10K-F-D	
R253	RL 0,35W 18,2KOHM+-1%TK50 RESISTOR	RL 083.1480	DRALORIC	SMA/207/18,2K-F-C	
R254	RL 0,35W 47,5KOHM+-1%TK50 RESISTOR	RL 083.1800	DRALORIC	SMA/207/47,5K-F-C	
R256	RL 0,35W 18,2KOHM+-1%TK50 RESISTOR	RL 083.1480	DRALORIC	SMA/207/18,2K-F-C	
R257	RS 0,3W 20KOHM+-10%CERMET TRIMMING POTENTIOMETER	RS 006.9151	BECKMAN	67W 20KOHM 10%	
R258	RL 0,35W 47,5KOHM+-1%TK50 RESISTOR	RL 083.1800	DRALORIC	SMA/207/47,5K-F-C	
R259	RL 0,35W 12,1KOHM+-1%TK50 RESISTOR	RL 083.1351	DRALORIC	SMA0207/12,1K-F-D	
R260	RL 0,35W 18,2KOHM+-1%TK50 RESISTOR	RL 083.1480	DRALORIC	SMA/207/18,2K-F-C	
R263	RL 0,35W 18,2KOHM+-1%TK50 RESISTOR	RL 083.1480	DRALORIC	SMA/207/18,2K-F-C	
R264	RS 0,3W 20KOHM+-10%CERMET TRIMMING POTENTIOMETER	RS 006.9151	BECKMAN	67W 20KOHM 10%	
R267	RL 0,35W3,88KOHM+-0,1%T25 RESISTOR	RL 084.2274	DRALORIC	SMA0207	
R268	RL 0,35W 18,2KOHM+-1%TK50 RESISTOR	RL 083.1480	DRALORIC	SMA/207/18,2K-F-C	
R269	RL 0,35W 3,92KOHM+-1%TK50 RESISTOR	RL 083.1039	RESISTA	MK2	
R270	RL 0,35W 18,2KOHM+-1%TK50 RESISTOR	RL 083.1480	DRALORIC	SMA/207/18,2K-F-C	
R271	RL 0,35W 10,0KOHM+-1%TK50 RESISTOR	RL 083.1297	DRALORIC	SMA0207/10K-F-D	
R272	RL 0,35W 432 OHM+-1%TK50 DEPOS.-CARBON RESISTOR	RL 083.0355	DRALORIC	SMA0207/432OHM-F-D	
R273	RL 0,35W 3,32KOHM+-1%TK50 RESISTOR	RL 083.0990	DRALORIC	SMA0207/3,32K-F-D	
R274	RL 0,35W 15,0KOHM+-1%TK50 RESISTOR	RL 083.1400	DRALORIC	SMA0207/15K-F-D	
R275	RL 0,35W3,28KOHM+-0,1%T25 RESISTOR	RL 084.2139	DRALORIC	SMA0207/3,28K-B-E	
R276	RL 0,35W 15,0KOHM+-1%TK50 RESISTOR	RL 083.1400	DRALORIC	SMA0207/15K-F-D	
R277	RL 0,35W 15,0KOHM+-1%TK50 RESISTOR	RL 083.1400	DRALORIC	SMA0207/15K-F-D	
R278	RL 0,35W 1KOHM+-1%TK50 RESISTOR	RL 082.2160	DRALORIC	SMA0207/1K-F-C	
R279	RL 0,35W 1MOHM+-1%TK50 RESISTOR	RL 082.7862	DRALORIC	SMA0207/1M-F-D	
R280	RL 0,35W 150 OHM+-1%TK50 RESISTOR	RL 082.9942	DRALORIC	SMA0207/150OHM-F-D	
R281	RL 0,35W 10,0KOHM+-1%TK50 RESISTOR	RL 083.1297	DRALORIC	SMA0207/10K-F-D	
R282	RL 0,35W 10,0KOHM+-1%TK50 RESISTOR	RL 083.1297	DRALORIC	SMA0207/10K-F-D	
R283	RL 0,35W 5,62KOHM+-1%TK50 RESISTOR	RL 082.2190	DRALORIC	SMA0207/5,62K-F-C	
R284	RL 0,35W 10,0KOHM+-1%TK50 RESISTOR	RL 083.1297	DRALORIC	SMA0207/10K-F-D	
R285	RL 0,35W 10,0KOHM+-1%TK50 RESISTOR	RL 083.1297	DRALORIC	SMA0207/10K-F-D	
R286	RL 0,35W 10,0KOHM+-1%TK50 RESISTOR	RL 083.1297	DRALORIC	SMA0207/10K-F-D	
R287	RL 0,35W 7,15KOHM+-1%TK50 RESISTOR	RL 083.1174	DRALORIC	SMA0207/7,15K-F-D	
R288	RL 0,35W 15,0KOHM+-1%TK50 RESISTOR	RL 083.1400	DRALORIC	SMA0207/15K-F-D	
R289	RL 0,35W 27,4KOHM+-1%TK50 RESISTOR	RL 082.2583	DRALORIC	SMA 0207/27,4K-F-C	
R290	RL 0,35W 56,2KOHM+-1%TK50 RESISTOR	RL 082.2231	DRALORIC	SMA0207/56,2K-F-C	
R291	RL 0,35W 110 KOHM+-1%TK50 RESISTOR	RL 083.2041	DRALORIC	SMA0207/110K-F-C	
R292	RL 0,35W 475 KOHM+-1%TK50 RESISTOR	RL 083.2593	DRALORIC	SMA0207/475K-F-C	
R293	RL 0,35W 10,0KOHM+-1%TK50 RESISTOR	RL 083.1297	DRALORIC	SMA0207/10K-F-D	
R294	RL 0,35W 27,4KOHM+-1%TK50 RESISTOR	RL 082.2583	DRALORIC	SMA 0207/27,4K-F-C	
R295	RL 0,35W 82,5KOHM+-1%TK50 RESISTOR	RL 082.2302	DRALORIC	SMA0207/82,5K-F-C	

Kennz. Comp.No.	Benennung Designation	Sachnummer Stock No.	Hersteller Manufacturer	Bezeichnung Designation	enthalten in contained in
R296	RL 0,35W 392 KOHM+-1%TK50 RESISTOR	RL 083.2512	DRALORIC	SMA0207/392K-F-C	
R297	RL 0,35W 10,0KOHM+-1%TK50 RESISTOR	RL 083.1297	DRALORIC	SMA0207/10K-F-D	
R298	RL 0,35W 10,0KOHM+-1%TK50 RESISTOR	RL 083.1297	DRALORIC	SMA0207/10K-F-D	
R299	RL 0,35W 15,0KOHM+-1%TK50 RESISTOR	RL 083.1400	DRALORIC	SMA0207/15K-F-D	
R300	RL 0,35W 15,0KOHM+-1%TK50 RESISTOR	RL 083.1400	DRALORIC	SMA0207/15K-F-D	
R301	RL 0,35W 5,62KOHM+-1%TK50 RESISTOR	RL 082.2190	DRALORIC	SMA0207/5,62K-F-C	
R302	RS 0,5W2KOHM+-10%10X10X5 CERMET POTENTIOMETER T	RS 247.7884	BOURNS	3386F-1-202	
R303	RL 0,35W 10,0KOHM+-1%TK50 RESISTOR	RL 083.1297	DRALORIC	SMA0207/10K-F-D	
R304	RL 0,35W 475 OHM+-1%TK50 RESISTOR	RL 083.0390	DRALORIC	SMA0207/475OHM-F-D	
R305	RL 0,35W 22,1KOHM+-1%TK50 RESISTOR	RL 083.1545	DRALORIC	SMA/207/22,1K-F-C	
R306	RS 0,5W50KOHM+-10%10X10X5 CERMET POTENTIOMETER T	RS 247.7910	BOURNS	3386F-1-503	
R307	RL 0,35W 4,75KOHM+-1%TK50 RESISTOR	RL 083.1097	DRALORIC	SMA0207/4,75K-F-D	
R308	RL 0,35W 3,01KOHM+-1%TK50 RESISTOR	RL 083.0961	DRALORIC	SMA0207/3,01K-F-D	
R309 ..312	RL 0,35W 10,0KOHM+-1%TK50 RESISTOR	RL 083.1297	DRALORIC	SMA0207/10K-F-D	
R313	RL 0,35W 51,1 OHM+-1%TK50 RESISTOR	RL 082.9536	DRALORIC	SMA0207/51,1OHM-F-D	
R314	RL 0,35W 825 OHM+-1%TK50 RESISTOR	RL 082.2502	DRALORIC	SMA 0207/825OHM-F-C	
R315	RL 0,35W 10,0KOHM+-1%TK50 RESISTOR	RL 083.1297	DRALORIC	SMA0207/10K-F-D	
R316	RL 0,35W 10,0KOHM+-1%TK50 RESISTOR	RL 083.1297	DRALORIC	SMA0207/10K-F-D	
R317	RL 0,35W 56,2KOHM+-1%TK50 RESISTOR	RL 082.2231	DRALORIC	SMA0207/56,2K-F-C	
R318	RL 0,35W 100KOHM+-1%TK50 RESISTOR	RL 082.1764	DRALORIC	SMA0207/100K-F-C	
R320	RL 0,35W 1KOHM+-1%TK50 RESISTOR	RL 082.2160	DRALORIC	SMA0207/1K-F-C	
R321	RL 0,35W 10,0KOHM+-1%TK50 RESISTOR	RL 083.1297	DRALORIC	SMA0207/10K-F-D	
R377	RL 0,35W 681 OHM+-1%TK50 RESISTOR	RL 083.0490	DRALORIC	SMA0207/681OHM-F-D	
R378	RL 0,35W 100 OHM+-1%TK50 METALFILM-RESISTOR	RL 082.6543	DRALORIC	SMA0207/100/HM-F-D	
R379	RL 0,35W 8,25KOHM+-1%TK50 RESISTOR	RL 083.1239	DRALORIC	SMA0207/8,25K-F-D	
R381	RL 0,35W 332 OHM+-1%TK50 RESISTOR	RL 083.0255	DRALORIC	SMA0207/332OHM-F-D	
R382	RL 0,35W 8,25KOHM+-1%TK50 RESISTOR	RL 083.1239	DRALORIC	SMA0207/8,25K-F-D	
R385	RL 0,35W 475 OHM+-1%TK50 RESISTOR	RL 083.0390	DRALORIC	SMA0207/475OHM-F-D	
R386	RL 0,35W 47,5 OHM+-1%TK50 RESISTOR	RL 082.9507	DRALORIC	SMA0207/47,5OHM-F-D	
R387	RL 0,35W 475 OHM+-1%TK50 RESISTOR	RL 083.0390	DRALORIC	SMA0207/475OHM-F-D	
R390	RL 0,35W 68,1 OHM+-1%TK50 RESISTOR	RL 082.9636	DRALORIC	SMA0207/68,1OHM-F-D	
R391	RL 0,35W 681 OHM+-1%TK50 RESISTOR	RL 083.0490	DRALORIC	SMA0207/681OHM-F-D	
R396	RL 0,35W 6,81KOHM+-1%TK50 RESISTOR	RL 082.2560	DRALORIC	SMA 0207/6,81K-F-C	
R397	RL 0,35W 3,32KOHM+-1%TK50 RESISTOR	RL 083.0990	DRALORIC	SMA0207/3,32K-F-D	
R399	RL 0,35W 475 OHM+-1%TK50 RESISTOR	RL 083.0390	DRALORIC	SMA0207/475OHM-F-D	
R401	RL 0,35W 475 OHM+-1%TK50 RESISTOR	RL 083.0390	DRALORIC	SMA0207/475OHM-F-D	
T1	LU UEBERTRAGER	805.5414			
T180	LU UEBERTRAGER	805.5450			
V1	AK BCY59IX N 45V 200MA TRANSISTOR	AK 010.5163	VALVO	BCY59IX	

uns alle Rechte vor

Kennz. Comp.No.	Benennung Designation	Sachnummer Stock No.	Hersteller Manufacturer	Bezeichnung Designation	enthalten in contained in
V2	AK 2N2369A N 15V 200MA TRANSISTOR	AK 010.4680	VALVO	2N2369A	
V3	AK 2N2369A N 15V 200MA TRANSISTOR	AK 010.4680	VALVO	2N2369A	
V4	AK 2N3947 N 40V 200MA TRANSISTOR	280.9860	MOTOROLA	2N3947/R&S-LV	
V8	AE QPND4154 50V PIN PINDIODE	805.5395	HEWLETT-P.	QPND4154	
V9	AE 5082-3379 50V PIN PINDIODE	AE 397.0049	HEWLETT-P.	5082-3379	
V10	AE 5082-3379 50V PIN PINDIODE	AE 397.0049	HEWLETT-P.	5082-3379	
V12	AE BA244 BER.SCH.DI.UHF DIODE	AE 439.6310	INTERMETAL	BA244	
V13	AE BA244 BER.SCH.DI.UHF DIODE	AE 439.6310	INTERMETAL	BA244	
V14	AE QPND4154 50V PIN PINDIODE	805.5395	HEWLETT-P.	QPND4154	
V15	AE QPND4154 50V PIN PINDIODE	805.5395	HEWLETT-P.	QPND4154	
V16	AE 5082-3379 50V PIN PINDIODE	AE 397.0049	HEWLETT-P.	5082-3379	
V17	AE QPND4154 50V PIN PINDIODE	805.5395	HEWLETT-P.	QPND4154	
V18	AE BA244 BER.SCH.DI.UHF DIODE	AE 439.6310	INTERMETAL	BA244	
V19	AE BA244 BER.SCH.DI.UHF DIODE	AE 439.6310	INTERMETAL	BA244	
V20	AE 5082-3379 50V PIN PINDIODE	AE 397.0049	HEWLETT-P.	5082-3379	
V39	AM BF247B N-D 25V JFET FET	AM 010.8879	VALVO	BF247B	
V40	AK BCY59IX N 45V 200MA TRANSISTOR	AK 010.5163	VALVO	BCY59IX	
V41	AK 2N2369A N 15V 200MA TRANSISTOR	AK 010.4680	VALVO	2N2369A	
V42	AK 2N2369A N 15V 200MA TRANSISTOR	AK 010.4680	VALVO	2N2369A	
V43	AK 2N3947 N 40V 200MA TRANSISTOR	280.9860	MOTOROLA	2N3947/R&S-LV	
V44	AE BA244 BER.SCH.DI.UHF DIODE	AE 439.6310	INTERMETAL	BA244	
V45	AE BA244 BER.SCH.DI.UHF DIODE	AE 439.6310	INTERMETAL	BA244	
V46	AE 5082-3379 50V PIN PINDIODE	AE 397.0049	HEWLETT-P.	5082-3379	
V47	AE QPND4154 50V PIN PINDIODE	805.5395	HEWLETT-P.	QPND4154	
V48	AE 5082-3379 50V PIN PINDIODE	AE 397.0049	HEWLETT-P.	5082-3379	
V49	AE QPND4154 50V PIN PINDIODE	805.5395	HEWLETT-P.	QPND4154	
V50	AE BA244 BER.SCH.DI.UHF DIODE	AE 439.6310	INTERMETAL	BA244	
V51	AE BA244 BER.SCH.DI.UHF DIODE	AE 439.6310	INTERMETAL	BA244	
V52	AE BA244 BER.SCH.DI.UHF DIODE	AE 439.6310	INTERMETAL	BA244	
V54	AK 2N3866 N 30V 400MA TRANSISTOR	AK 010.0926	VALVO	2N3866	
V55	AK 2N3866 N 30V 400MA TRANSISTOR	AK 010.0926	VALVO	2N3866	
V57	AD 1N4448 75V 0A15 UDI DIODE	AD 012.0700	TEXAS INST	1N4448 GEGURTET	
V58	AM BF247B N-D 25V JFET FET	AM 010.8879	VALVO	BF247B	
V59	AE QPND4154 50V PIN PINDIODE	805.5395	HEWLETT-P.	QPND4154	
V66	AE 5082-3379 50V PIN PINDIODE	AE 397.0049	HEWLETT-P.	5082-3379	
V67	AE QPND4154 50V PIN PINDIODE	805.5395	HEWLETT-P.	QPND4154	
V100	AK BCY59IX N 45V 200MA TRANSISTOR	AK 010.5163	VALVO	BCY59IX	
V101	AK 2N2369A N 15V 200MA TRANSISTOR	AK 010.4680	VALVO	2N2369A	
V102	AK 2N2369A N 15V 200MA TRANSISTOR	AK 010.4680	VALVO	2N2369A	

Kennz. Comp.No.	Benennung Designation	Sachnummer Stock No.	Hersteller Manufacturer	Bezeichnung Designation	enthalten in contained in
V103	AK 2N2369A N 15V 200MA TRANSISTOR	AK 010.4680	VALVO	2N2369A	
V104	AE BA244 BER.SCH.DI.UHF DIODE	AE 439.6310	INTERMETAL	BA244	
V105	AE BA244 BER.SCH.DI.UHF DIODE	AE 439.6310	INTERMETAL	BA244	
V106	AE QPND4154 50V PIN PINDIODE	805.5395	HEWLETT-P.	QPND4154	
V107	AE 5082-3379 50V PIN PINDIODE	AE 397.0049	HEWLETT-P.	5082-3379	
V108	AE QPND4154 50V PIN PINDIODE	805.5395	HEWLETT-P.	QPND4154	
V109	AE BA244 BER.SCH.DI.UHF DIODE	AE 439.6310	INTERMETAL	BA244	
V110	AE BA244 BER.SCH.DI.UHF DIODE	AE 439.6310	INTERMETAL	BA244	
V111	AE QPND4154 50V PIN PINDIODE	805.5395	HEWLETT-P.	QPND4154	
V112	AE QPND4154 50V PIN PINDIODE	805.5395	HEWLETT-P.	QPND4154	
V129	AM BF247B N-D 25V JFET FET	AM 010.8879	VALVO	BF247B	
V130	AK BCY59IX N 45V 200MA TRANSISTOR	AK 010.5163	VALVO	BCY59IX	
V131 ..133	AK 2N2369A N 15V 200MA TRANSISTOR	AK 010.4680	VALVO	2N2369A	
V134	AE BA244 BER.SCH.DI.UHF DIODE	AE 439.6310	INTERMETAL	BA244	
V135	AE BA244 BER.SCH.DI.UHF DIODE	AE 439.6310	INTERMETAL	BA244	
V136	AE QPND4154 50V PIN PINDIODE	805.5395	HEWLETT-P.	QPND4154	
V137	AE 5082-3379 50V PIN PINDIODE	AE 397.0049	HEWLETT-P.	5082-3379	
V138	AE QPND4154 50V PIN PINDIODE	805.5395	HEWLETT-P.	QPND4154	
V139	AE BA244 BER.SCH.DI.UHF DIODE	AE 439.6310	INTERMETAL	BA244	
V140	AE BA244 BER.SCH.DI.UHF DIODE	AE 439.6310	INTERMETAL	BA244	
V141	AE QPND4154 50V PIN PINDIODE	805.5395	HEWLETT-P.	QPND4154	
V142	AE QPND4154 50V PIN PINDIODE	805.5395	HEWLETT-P.	QPND4154	
V179	AM BF247B N-D 25V JFET FET	AM 010.8879	VALVO	BF247B	
V180	AK BCY59IX N 45V 200MA TRANSISTOR	AK 010.5163	VALVO	BCY59IX	
V181 ..183	AK 2N2369A N 15V 200MA TRANSISTOR	AK 010.4680	VALVO	2N2369A	
V184	AE BA244 BER.SCH.DI.UHF DIODE	AE 439.6310	INTERMETAL	BA244	
V185	AE BA244 BER.SCH.DI.UHF DIODE	AE 439.6310	INTERMETAL	BA244	
V186	AE QPND4154 50V PIN PINDIODE	805.5395	HEWLETT-P.	QPND4154	
V187	AE 5082-3379 50V PIN PINDIODE	AE 397.0049	HEWLETT-P.	5082-3379	
V188	AE QPND4154 50V PIN PINDIODE	805.5395	HEWLETT-P.	QPND4154	
V189	AE BA244 BER.SCH.DI.UHF DIODE	AE 439.6310	INTERMETAL	BA244	
V190	AE BA244 BER.SCH.DI.UHF DIODE	AE 439.6310	INTERMETAL	BA244	
V192	AE 5082-2800 SCHOTTKY DIODE	AE 012.9066	HEWLETT-P.	5082-2800	
V193	AE 5082-2800 SCHOTTKY DIODE	AE 012.9066	HEWLETT-P.	5082-2800	
V194	AE QPND4154 50V PIN PINDIODE	805.5395	HEWLETT-P.	QPND4154	
V195	AE QPND4154 50V PIN PINDIODE	805.5395	HEWLETT-P.	QPND4154	
V197	AK 2N2219 N 30V 800MA TRANSISTOR	010.5670	INTERMETAL	2N2219	
V198	AK 2N3866 N 30V 400MA TRANSISTOR	AK 010.0926	VALVO	2N3866	
V199	AM BF247B N-D 25V JFET FET	AM 010.8879	VALVO	BF247B	

Für diese Unterlage behalten wir uns alle Rechte vor

Kennz. Comp.No.	Benennung Designation	Sachnummer Stock No.	Hersteller Manufacturer	Bezeichnung Designation	enthalten in contained in
V200	AE 5082-3379 50V PIN PINDIODE	AE 397.0049	HEWLETT-P.	5082-3379	
V221	AE BZX79/C18 0,5W ZDI ZENER DIODE	AE 012.2578	VALVO	BZX55/(79)C18	
V222	AE BZX79/C18 0,5W ZDI ZENER DIODE	AE 012.2578	VALVO	BZX55/(79)C18	
V223	AK BC327-40 P 45V 800MA TRANSISTOR	303.9518	INTERMETAL	BC327-40	
V224	AK BC337-40 N 45V 800MA TRANSISTOR	303.9524	SIEMENS	BC337-40	
V230 ..234	AD 1N4448 75V 0A15 UDI DIODE	AD 012.0700	TEXAS INST	1N4448 GEGURTET	
V235	AE 1N827 6,2V REFDI REFERENCE DIODE	AE 418.0029	CDI	1N827	
V236	AD 1N4448 75V 0A15 UDI DIODE	AD 012.0700	TEXAS INST	1N4448 GEGURTET	
V237	AD 1N4448 75V 0A15 UDI DIODE	AD 012.0700	TEXAS INST	1N4448 GEGURTET	
V238	BJ LM335H TEMP.SENSOR PRECION TEMP.SENSOR	395.2867	NSC	LM335H	
V380	AK BF374 N 25V 100MA TRANSISTOR	377.3859	MOTOROLA	BF374	
V381	AK BFX48 P 30V 100MA TRANSISTOR	AK 010.3202	SGS	BFX48	
V395	AK BF374 N 25V 100MA TRANSISTOR	377.3859	MOTOROLA	BF374	
V399	AE 5082-2800 SCHOTTKY DIODE	AE 012.9066	HEWLETT-P.	5082-2800	
V401	AE 5082-2800 SCHOTTKY DIODE	AE 012.9066	HEWLETT-P.	5082-2800	
X1	FJ EINBAUWINKELST. SMC ANGLE CONNECTOR	FJ 249.9684	RADIALL	R 112 669	
X4	FJ EINBAUWINKELST. SMC ANGLE CONNECTOR	FJ 249.9684	RADIALL	R 112 669	
X5	FJ EINBAUWINKELST. SMC ANGLE CONNECTOR	FJ 249.9684	RADIALL	R 112 669	
X7	FJ EINBAUWINKELST. SMC ANGLE CONNECTOR	FJ 249.9684	RADIALL	R 112 669	
X8	FJ EINBAUWINKELST. SMC ANGLE CONNECTOR	FJ 249.9684	RADIALL	R 112 669	
X15	FP INDIREKT.STECKERL.36P. PIN CONNECTOR 6-POLIG	FP 242.3600	BINDER	742-5-11-0178-00-36	
X16	FP KURZSCHLUSSBUCHSE SHORTING PLUG	FP 491.7042	PK	452-70302	
X17	FP INDIREKT.STECKERL.36P. PIN CONNECTOR 2-POLIG	FP 242.3600	BINDER	742-5-11-0178-00-36	
X18	FP INDIREKT.STECKERL.36P. PIN CONNECTOR 2-POLIG	FP 242.3600	BINDER	742-5-11-0178-00-36	
X19	FP INDIREKT.STECKERL.36P. PIN CONNECTOR 2-POLIG	FP 242.3600	BINDER	742-5-11-0178-00-36	
X21	FP IND.STECKERLEISTE 64 P MALE MULTIPOINT CONNECTOR	FP 273.0490	PANDUIT	100-964-033/999	
X22	FP KURZSCHLUSSBUCHSE SHORTING PLUG	FP 491.7042	PK	452-70302	
X23	FP INDIREKT.STECKERL.36P. PIN CONNECTOR 6-POLIG	FP 242.3600	BINDER	742-5-11-0178-00-36	
X24	FP INDIREKT.STECKERL.36P. PIN CONNECTOR 2-POLIG	FP 242.3600	BINDER	742-5-11-0178-00-36	
X40	FP INDIREKT.STECKERL.36P. PIN CONNECTOR 2-POLIG	FP 242.3600	BINDER	742-5-11-0178-00-36	
X41	FP INDIREKT.STECKERL.36P. PIN CONNECTOR 2-POLIG	FP 242.3600	BINDER	742-5-11-0178-00-36	
X42	FP INDIREKT.STECKERL.36P. PIN CONNECTOR 2-POLIG	FP 242.3600	BINDER	742-5-11-0178-00-36	
X44	FP INDIREKT.STECKERL.36P. PIN CONNECTOR 6-POLIG	FP 242.3600	BINDER	742-5-11-0178-00-36	

Kennz. Comp.No.	Benennung Designation	Sachnummer Stock No.	Hersteller Manufacturer	Bezeichnung Designation	enthalten in contained in
X45	FP KURZSCHLUSSBUCHSE SHORTING PLUG	FP 491.7042	PK	452-70302	
X46	FP INDIREKT.STECKERL.36P. PIN CONNECTOR 2-POLIG	FP 242.3600	BINDER	742-5-11-0178-00-36	
X47	FP KURZSCHLUSSBUCHSE SHORTING PLUG	FP 491.7042	PK	452-70302	
X48	FP INDIREKT.STECKERL.36P. PIN CONNECTOR 2-POLIG	FP 242.3600	BINDER	742-5-11-0178-00-36	
X49	FP INDIREKT.STECKERL.36P. PIN CONNECTOR 2-POLIG	FP 242.3600	BINDER	742-5-11-0178-00-36	
X100	FP INDIREKT.STECKERL.36P. PIN CONNECTOR 2-POLIG	FP 242.3600	BINDER	742-5-11-0178-00-36	
X101	FP INDIREKT.STECKERL.36P. PIN CONNECTOR 2-POLIG	FP 242.3600	BINDER	742-5-11-0178-00-36	
X102	FP INDIREKT.STECKERL.36P. PIN CONNECTOR 2-POLIG	FP 242.3600	BINDER	742-5-11-0178-00-36	
X104	FP INDIREKT.STECKERL.36P. PIN CONNECTOR 6-POLIG	FP 242.3600	BINDER	742-5-11-0178-00-36	
X105	FP KURZSCHLUSSBUCHSE SHORTING PLUG	FP 491.7042	PK	452-70302	
X106	FP INDIREKT.STECKERL.36P. PIN CONNECTOR 2-POLIG	FP 242.3600	BINDER	742-5-11-0178-00-36	
X107	FP KURZSCHLUSSBUCHSE SHORTING PLUG	FP 491.7042	PK	452-70302	
X108	FP INDIREKT.STECKERL.36P. PIN CONNECTOR 2-POLIG	FP 242.3600	BINDER	742-5-11-0178-00-36	
X130	FP INDIREKT.STECKERL.36P. PIN CONNECTOR 2-POLIG	FP 242.3600	BINDER	742-5-11-0178-00-36	
X131	FP INDIREKT.STECKERL.36P. PIN CONNECTOR 2-POLIG	FP 242.3600	BINDER	742-5-11-0178-00-36	
X132	FP INDIREKT.STECKERL.36P. PIN CONNECTOR 2-POLIG	FP 242.3600	BINDER	742-5-11-0178-00-36	
X134	FP INDIREKT.STECKERL.36P. PIN CONNECTOR 6-POLIG	FP 242.3600	BINDER	742-5-11-0178-00-36	
X135	FP KURZSCHLUSSBUCHSE SHORTING PLUG	FP 491.7042	PK	452-70302	
X136	FP INDIREKT.STECKERL.36P. PIN CONNECTOR 2-POLIG	FP 242.3600	BINDER	742-5-11-0178-00-36	
X137	FP KURZSCHLUSSBUCHSE SHORTING PLUG	FP 491.7042	PK	452-70302	
X138	FP INDIREKT.STECKERL.36P. PIN CONNECTOR 2-POLIG	FP 242.3600	BINDER	742-5-11-0178-00-36	
X180	FP INDIREKT.STECKERL.36P. PIN CONNECTOR 2-POLIG	FP 242.3600	BINDER	742-5-11-0178-00-36	
X181	FP INDIREKT.STECKERL.36P. PIN CONNECTOR 2-POLIG	FP 242.3600	BINDER	742-5-11-0178-00-36	
X182	FP INDIREKT.STECKERL.36P. PIN CONNECTOR 2-POLIG	FP 242.3600	BINDER	742-5-11-0178-00-36	
X184	FP INDIREKT.STECKERL.36P. PIN CONNECTOR 6-POLIG	FP 242.3600	BINDER	742-5-11-0178-00-36	
X185	FP KURZSCHLUSSBUCHSE SHORTING PLUG	FP 491.7042	PK	452-70302	
X186	FP INDIREKT.STECKERL.36P. PIN CONNECTOR 2-POLIG	FP 242.3600	BINDER	742-5-11-0178-00-36	
X187	FP KURZSCHLUSSBUCHSE SHORTING PLUG	FP 491.7042	PK	452-70302	
X188	FP INDIREKT.STECKERL.36P. PIN CONNECTOR	FP 242.3600	BINDER	742-5-11-0178-00-36	

uns alle Rechte vor

Kennz. Comp.No.	Benennung Designation	Sachnummer Stock No.	Hersteller Manufacturer	Bezeichnung Designation	enthalten in contained in
	2-POLIG				
X189	FP INDIREKT.STECKERL.36P. PIN CONNECTOR 2-POLIG	FP 242.3600	BINDER	742-5-11-0178-00-36	
X50A	FP INDIREKT.STECKERL.36P. PIN CONNECTOR 8-POLIG	FP 242.3600	BINDER	742-5-11-0178-00-36	
X50B	FP INDIREKT.STECKERL.36P. PIN CONNECTOR 8-POLIG	FP 242.3600	BINDER	742-5-11-0178-00-36	
					- ENDE -

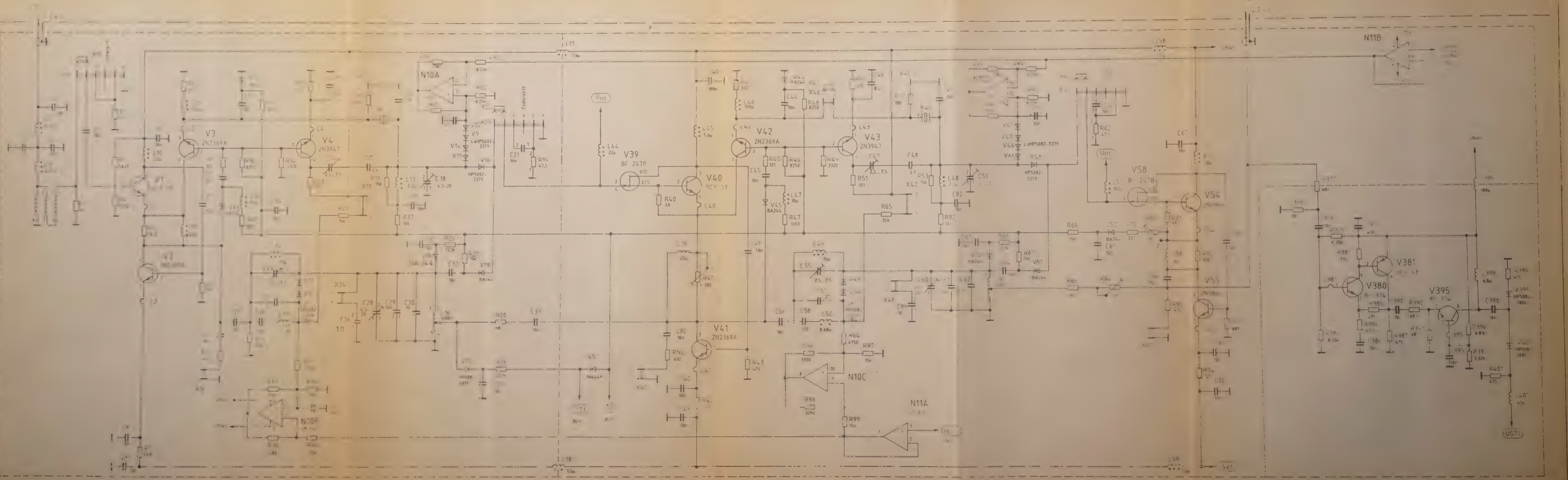
N10A
N10B
N10C
N11A
N11B
V3
2N2369A
V4
2N3947
V39
BF 247B
V40
3CY 59
V41
2N2369A
V42
2N2369A
V43
2N3947
V58
BF 247B
V54
V55
V380
V381
V395
L17
L18
L59
L58
L44
L46
L45
L42
L43
L10
L13
L40
L47
L48
L49
L50
L51
L52
L53
L54
L55
L56
L57
L60
L61
L62
L63
L64
L65
L66
L67
L68
L69
L70
L71
L72
L73
L74
L75
L76
L77
L78
L79
L80
L81
L82
L83
L84
L85
L86
L87
L88
L89
L90
L91
L92
L93
L94
L95
L96
L97
L98
L99

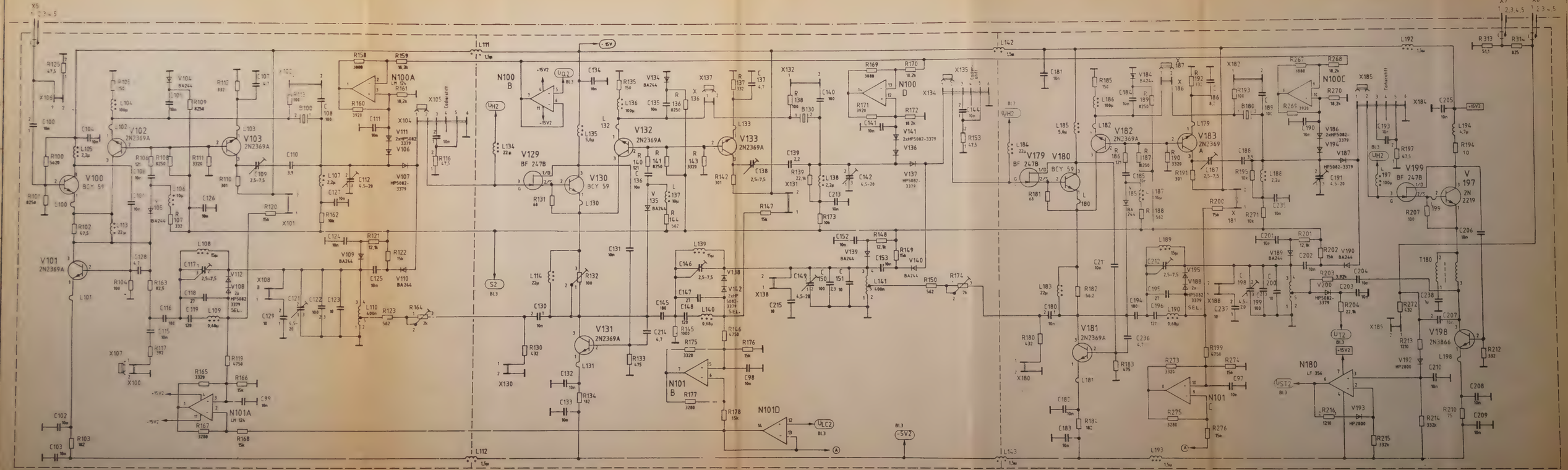
X5
X7
X8
L111
L142
L112
L143
L192
N100A
LM 124
N100B
N100C
N100D
N101A
N101B
N101C
N101D
N180
LF 356
V100
BCY 59
V101
2N2369A
V102
2N2369A
V103
2N2369A
V129
BF 247B
V130
BCY 59
V131
2N2369A
V132
2N2369A
V133
2N2369A
V179
BF 247B
V180
BCY 59
V181
2N2369A
V182
2N2369A
V183
2N2369A
V199
BF 247B
V197
2N 2219
V198
2N3866
V192
HP2800
V193
HP2800
S2
BL3
UH2
UZ2
UZ1
UL2
-5V2
+15V2
-15V2
+15V
X100
X101
X104
X105
X107
X108
X130
X131
X132
X134
X135
X136
X137
X138
X180
X181
X182
X183
X184
X185
X186
X187
X188
T180
IF-FILTER 1
805. 5337 S
ROHDE&SCHWARZ
FSA

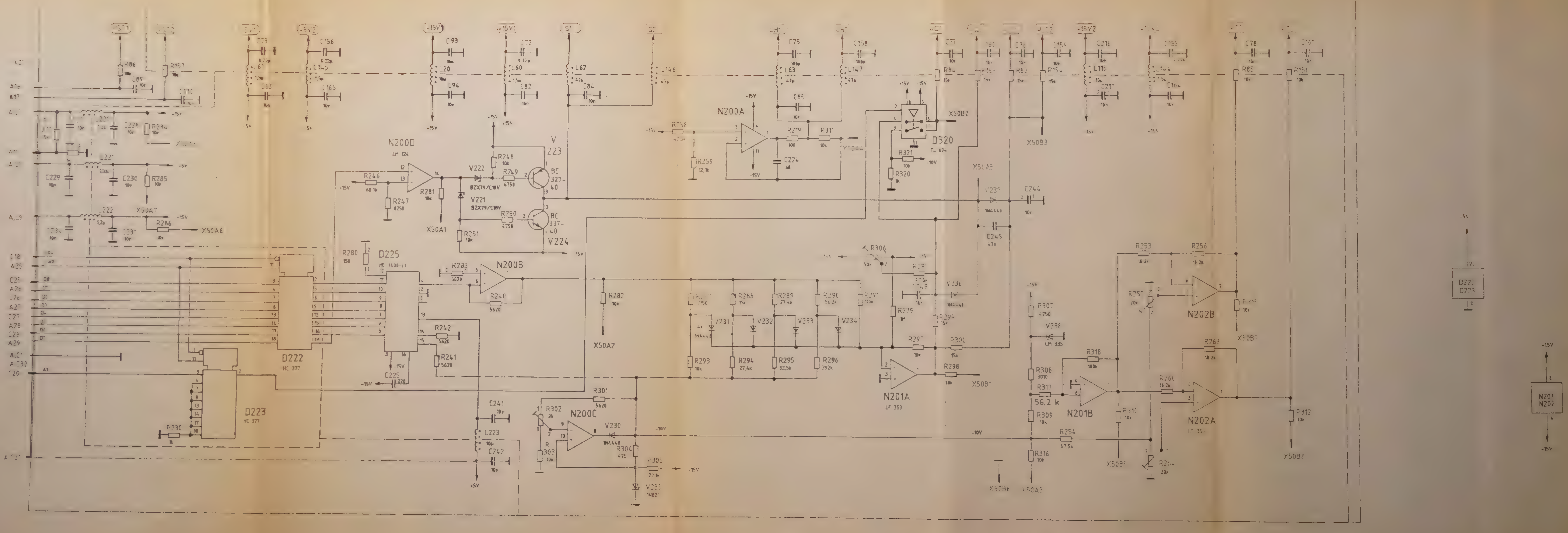

A	32 744(85)	02 87	Gn
C	32 765(1)	09 87	Gn
E	37 062 (14)	05 88	Gn

ROHDE & SCHWARZ

IKGF — Bearb. 01.87 — GN

IF-FILTER 1

FSA

805. 5337 S

Blatt 3 / 3 B

804 951 6

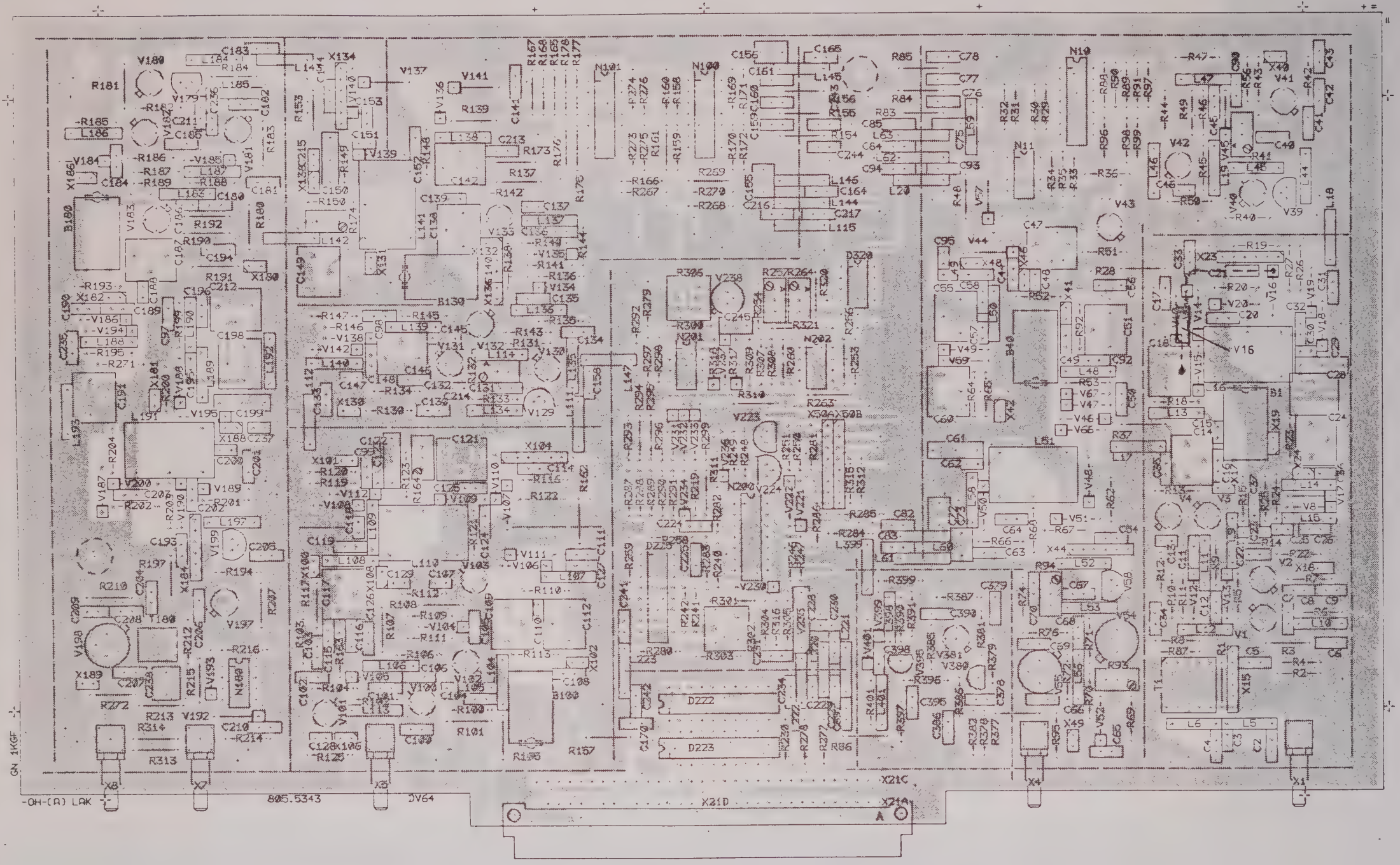

Ansicht und Leitungsfuhrung Bauteilseite
View of tracks on component side

VARIANTENERKLÄRUNG / VERSION
VAR 02 – GRUNDAUSFÜHRUNG / BASIC MODEL

C	32765	12.87	GN
D	37062 (14)	05.88	GN

Maße ohne Toleranzangabe

Maßstab 1 : 1

Halbzeug Werkstoff

1KGF	Tag	Name
Bearb	01.87	GN
Gepr		
Norm		

Benennung: IF-FILTER 1 — Z

ROHDE & SCHWARZ

Zeichn.-Nr. 805.5337.01 EE — Blatt Nr. 3

Zu Gerät FSA — reg. 804.9516 V — erste Z. 804.9516

And. Zust. — Änderungs Mitteilung — Tag — Name

ACHTUNG EGB! Elektrostatisch gefährdete Bauelemente erfordern eine besondere Handhabung
ATTENTION ESD! Electrostatic sensitive devices require a special handling

hierzu HVC 2501

07 6001 81

Für diese Unterlage behalten wir uns alle Rechte vor

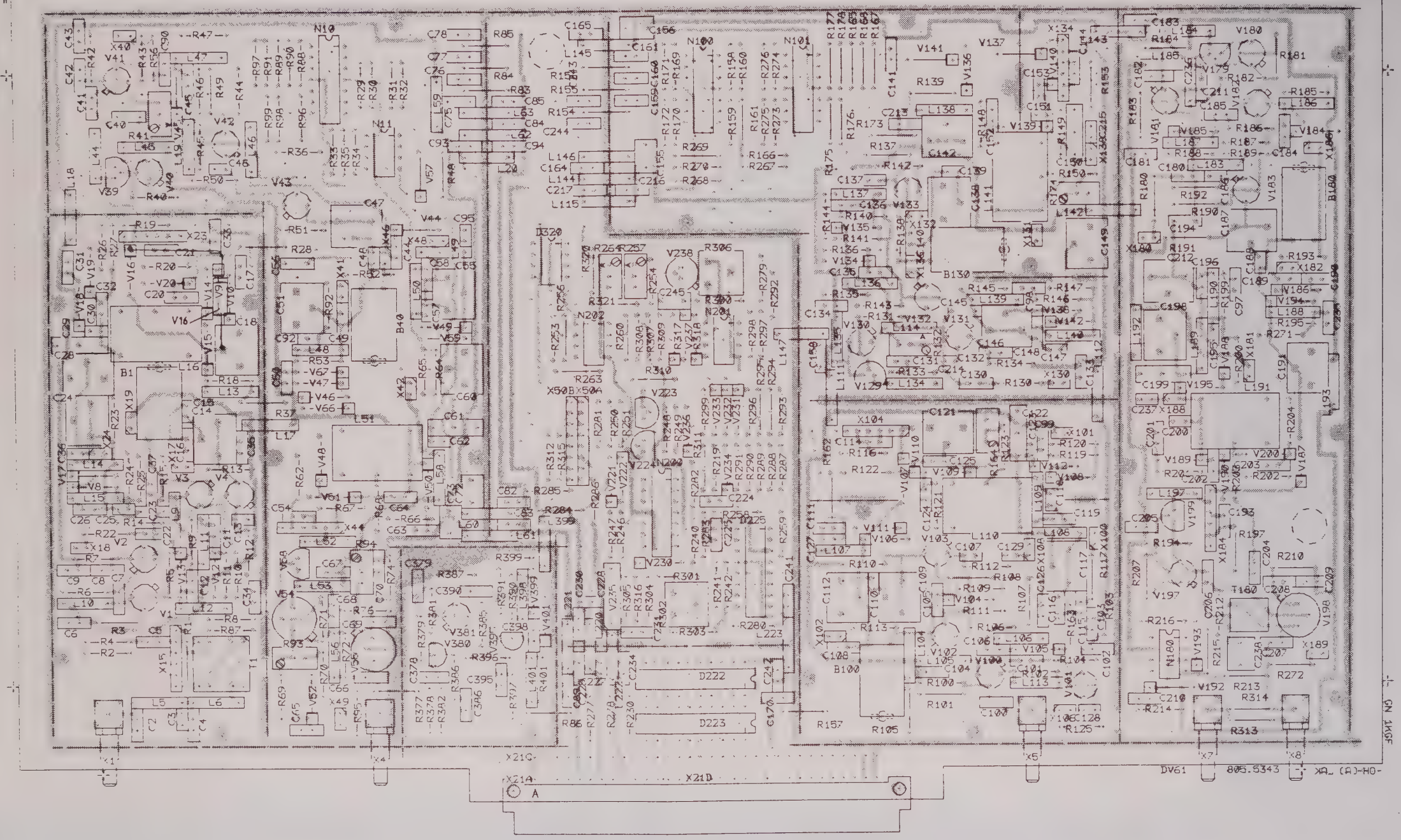

Ansicht und Leitungsfuhrung Lotseite
View of tracks on solder side

VARIANTENERKLÄRUNG/VERSION
VAR 02 – GRUNDAUSFÜHRUNG/BASIC MODEL

A	32 744 (85)	05.87	Gn
C	32 765	12.87	GN
D	37 062 (14)	05.88	GN

Maße ohne Toleranzangabe

Maßstab 1 : 1

Halbzeug Werkstoff

1KGF	Tag	Name
Bearb	01.87	GN
Gepr		
Norm		

Benennung: IF - FILTER 1 — Z

ROHDE & SCHWARZ

Zeichn Nr: 805.5337.01 EE — Blatt Nr 4 B

zu Gerät: FSA — reg 804.9516 V — erste Z 804. 9516

Änd Zust — Änderungs Mitteilung — Tag — Name

ACHTUNG EGB!
Elektrostatisch gefährdete Bauelemente erfordern eine besondere Handhabung

ATTENTION ESD!
Electrostatic sensitive devices require a special handling

Für diese Unterlage behalten wir uns alle Rechte vor

07 6001 81

ROHDE&SCHWARZ

SERVICE DOCUMENTATION

IF Filter 2

805.4318.02

Contents

		Page
6	**Service Instructions IF Filter 2**	6.1
6.1	**Function Description**	6.1
6.1.1	Input and Output Selector	6.1
6.1.2	21.4-MHz Buffer Amplifier	6.1
6.1.3	Filter	6.1
6.1.3.1	Description of a Filter Stage	6.1
6.1.3.2	Output Amplifier	6.2
6.1.4	Mixer	6.3
6.1.4.1	Downwards Mixer	6.3
6.1.4.2	Upwards Mixer	6.3
6.1.5	34.412-MHz Voltage-controlled Crystal Oscillator (VCXO)	6.3
6.1.6	Filter Control	6.3
6.1.6.1	Bandwidth Setting and Switch Control	6.3
6.1.6.2	Oscillator Tuning	6.3
6.2	**Testing and Adjustment**	6.6
6.2.1	Power Supply	6.6
6.2.2	Testing the Control	6.6
6.2.3	Testing the LO D/A Converter	6.6
6.2.4	Testing the Function Network	6.6
6.2.5	Testing and Adjusting the Oscillator	6.7
6.2.6	Final Adjustment	6.8
6.3	**Troubleshooting**	6.10

Parts lists
Circuit diagrams
Component location plans

6 Service Instructions IF Filter 2

(See circuit diagram 805.4318 S)

6.1 Function Description

The module contains a 5-pole bandpass filter with a centre frequency of 4.194 MHz whose -3-dB bandwidth can be varied between ≤ 10 Hz and 1 kHz.

The 21.4-MHz IF signal applied to X8 is converted by a 17.206-MHz crystal oscillator signal to 4.194 MHz, passes through the filter, and is then mixed with the same crystal oscillator to 21.4 MHz again.

With resolution bandwidths >1kHz, the input signal is applied via a buffer amplifier (broadband, >20 MHz) to output X1.

6.1.1 Input and Output Selector

V1, V2, V221 and V223 conduct for bandwidths ≥ 1 kHz. V5 and V201 are turned off. The reverse applies to bandwidths < 1 kHz.
The switchover is controlled by N252.

Component	RBW ≥ 1 kHz	RBW < 1 kHz
N252A	+13.2 V	−14 V
N252B	+13.2 V	−14 V
N252C	−14 V	+13.2 V
N252D	−14 V	+13.2 V

6.1.2 21.4-MHz Buffer Amplifier

For bandwidths >1 kHz, the 21.4-MHz IF signal from X8 is applied via the buffer amplifier V220 and V224 to output X1.

Its gain is: $V \approx +5\,dB$

6.1.3 Filter

The filter consists of 5 crystal resonators which are decoupled from one another by buffer amplifiers. The result is an approximately Gaussian passband curve.

The centre frequency of the filter is 4.194 MHz. The -3-dB bandwidth of the complete filter can be changed between <10 Hz and slightly above 1 kHz using the control voltage V_{BW} which is generated by the filter control.

The bandwidth of an individual filter is larger than the bandwidth of the complete filter by a factor of ≈ 2.6.

6.1.3.1 Description of a Filter Stage

The function of a crystal filter will be described using the example of the second filter (see also Fig. 6-1).

The output signal of the buffer amplifier comprising V60 and V61 is applied via C65 to the emitter follower V62 and from its output through the crystal B60 operated in series resonance to the load resistor R_L formed by the PIN diode V64 and then via C90 to the high-impedance input of the following amplifier. The quality of the series circuit L_Q, C_Q, R_S and V64, and thus the filter bandwidth, is determined by the resistance of the PIN diode V64 which is set by V_{BW} with the controllable current source N60.

The collector of transistor V62 applies a larger positive feedback current L_{FB} to the feedback of the buffer amplifier the smaller the load resistance R_L. The gain of the buffer amplifier is thus increased and compensates the voltage division at R_S and R_L.

The compensation is adjusted using R65.

The reactive components of R_L and the input impedance of the following amplifier are compensated by C74 and L64.

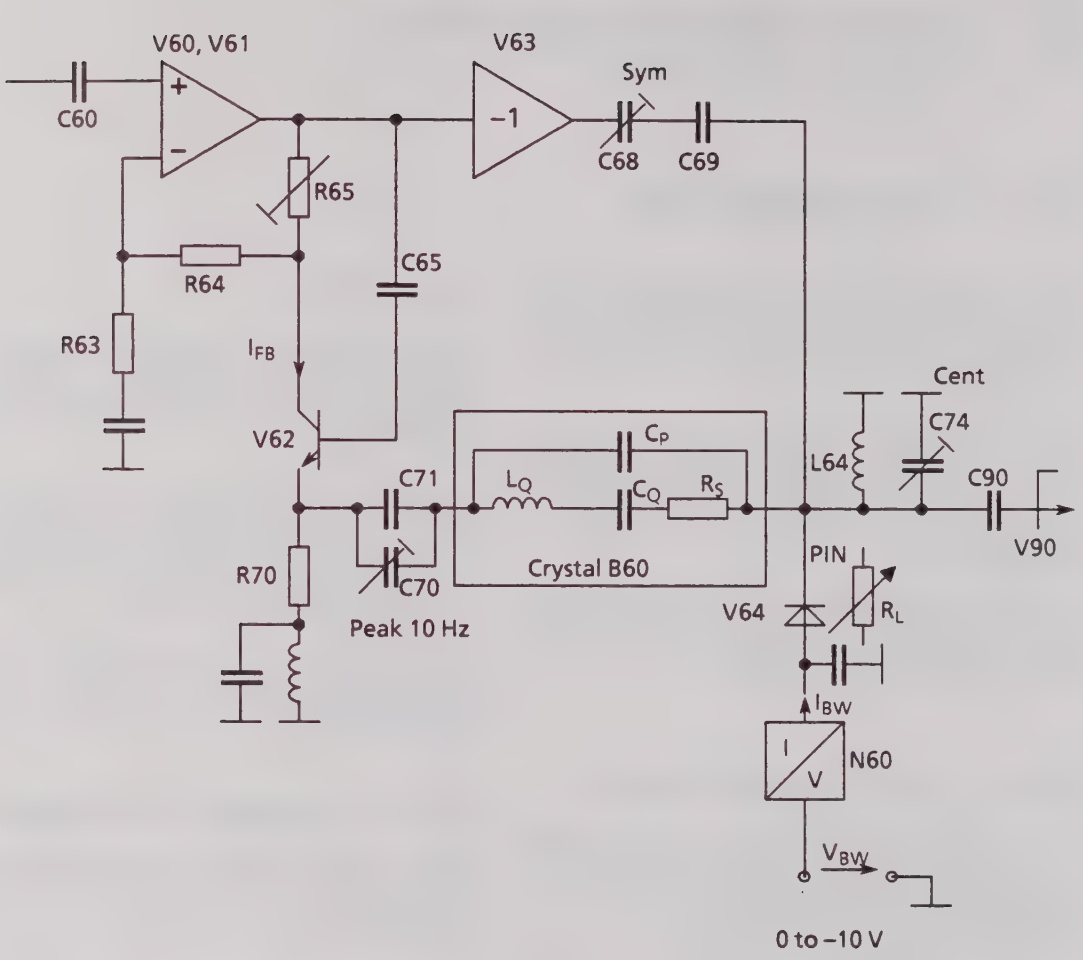

Fig. 6-1 Basic circuit diagram of a crystal filter

In order to compensate the parallel capacitance C_P of the crystal, a signal of equal magnitude but with a 180° phase shift by V63 is added to the output signal at V64 by C68 and C69.

The centre frequency with small bandwidths is adjusted using C70.

The first filter is different from the other 4 filters and is fed from a tapped resonant circuit (L34, L35, C30, C31) which provides a voltage gain of ≈ 7.5 dB.

6.1.3.2 Output Amplifier

The last crystal filter is followed by a low-noise amplifier with V180 and V181. The negative feedback is via transformer T6 resulting in a gain of V ≈ 6 dB.

This is followed by a single-stage amplifier with V182 with a gain of V = 0 to + 5 dB.

Its output signal is applied via an adapter network (C188, C189, L183, C190) to the upwards mixer.

R190 is used to adjust the gain of the filter section.

6.1.4 Mixer

6.1.4.1 Downwards Mixer

The mixer comprising T1, T2, T3 and D5 is responsible for converting the 21.4-MHz IF signal to the filter centre frequency of 4.194 MHz. MOS FETs are used as switches.

The IF output of the mixer is terminated by a bandpass separating filter (C15, L5, R11, R12, C16, L6).

The crystal oscillator frequency is divided by 2 by the flip-flop D6. The 17.206-MHz signal obtained controls the gates of the MOS FET switches of the mixer via the driver stages V8 and V9; T4 and T5 ensure push-pull symmetry.

6.1.4.2 Upwards Mixer

The diode ring mixer N200 converts the filtered 4.194 MHz signal back to the original IF of 21.4 MHz.

Its IF output is terminated by a bandpass separating filter with a centre frequency of 21.4 MHz. The crystal filter B200 suppresses the 17.2-MHz oscillator signal.

This is obtained from the 34.412-MHz crystal oscillator signal by a flip-flop (D200) and is applied to the Low input of the mixer via the driver transistor V200.

6.1.5 34.412-MHz Voltage-controlled Crystal Oscillator (VCXO)

The basic circuit is a Colpitts oscillator with V230 as the active element.

The collector circuit consists of L232, C233, C232, C234 and C235 and is dampened by R233 whilst ensuring a correct build-up of oscillation.

The oscillator frequency can be changed by approx. ± 1 kHz by the voltages $+V_{LO}$ and $-V_{LO}$ using the load capacitance (V232 and V233) in series with the crystal.

The oscillator signal is coupled-out by V231 and distributed to the two mixers via T8.

The highpass consisting of C241 to C243 and L236, L237 prevents crosstalk of the 21.4-MHz IF via the mixers.

6.1.6 Filter Control

The module functions are controlled by the microprocessor via latches D250 and D251 and address decoder D252.

A control command is read in by means of the following pulse sequence.

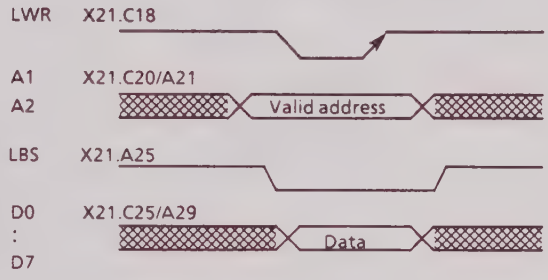

6.1.6.1 Bandwidth Setting and Switch Control

Switching over between the broadband branch and the filter branch is effected via N252 with the MSB of the data word read into D251. The supply voltage of the oscillator is switched off via V258 if the filter is not active. The remaining 7 bits are used for the broadband setting of the filter.

The D/A converter D254, N251B and the following function network (N251A, V250 to V254) are used to generate the voltage V_{BW} which controls the current sources of the crystal filter.

Bandwidth	Addr.	DØ | D1 | D2 | D3 | D4 | D5 | D6	D7
10 Hz→1 kHz	1	127_{10} → Ø	Ø
>1 kHz	1	X	1

6.1.6.2 Oscillator Tuning

The data word read into D250 via address Ø is converted via the D/A converter D253, N250A and the inverter 250B into a differential voltage which tunes the oscillator frequency via the tuning diodes V232 and V233.

Data	Ø → 255_{10}
Frequency	Min → Max.

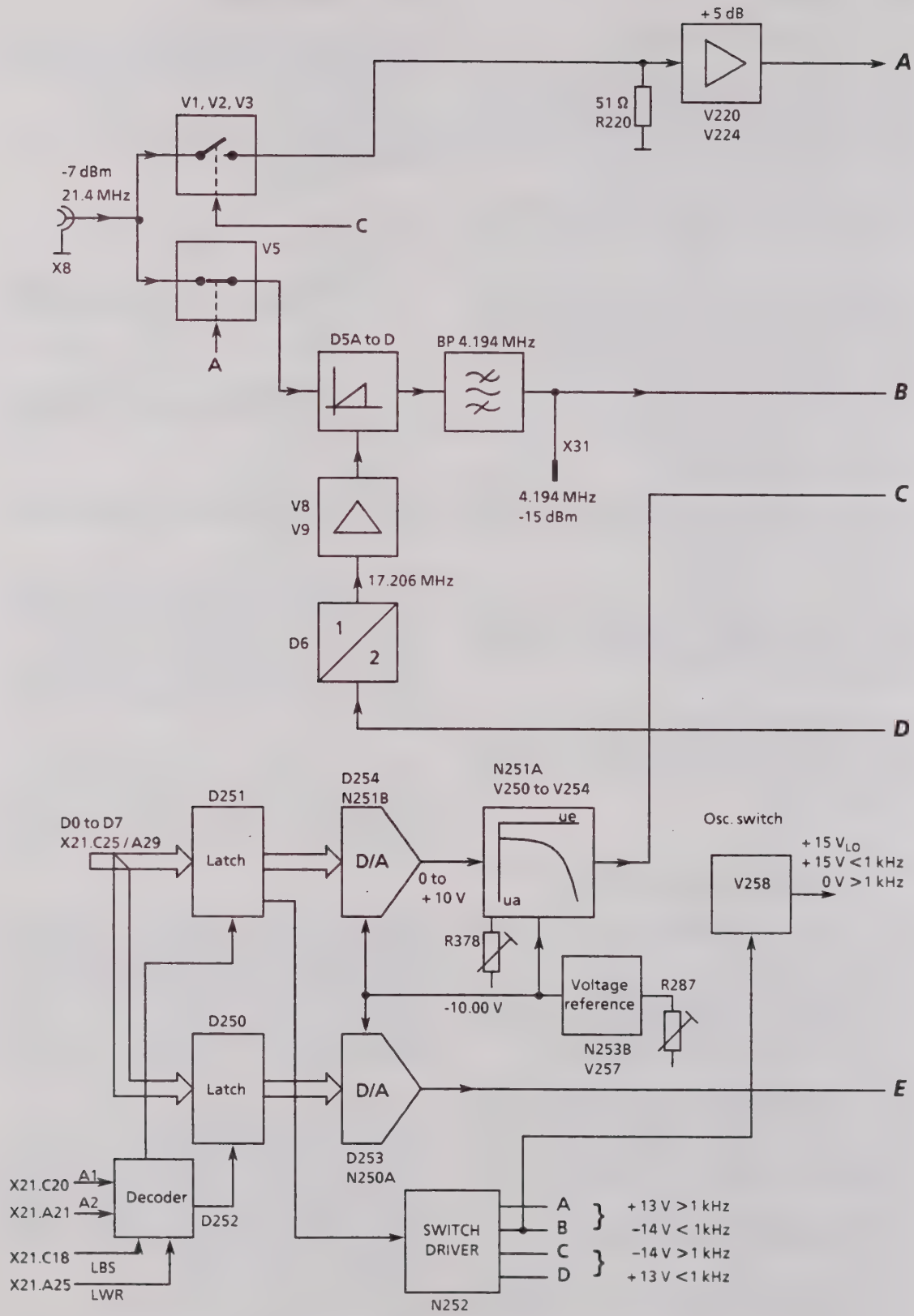

Fig. 6-2 Block diagram of IF filter 2 module (part 1)

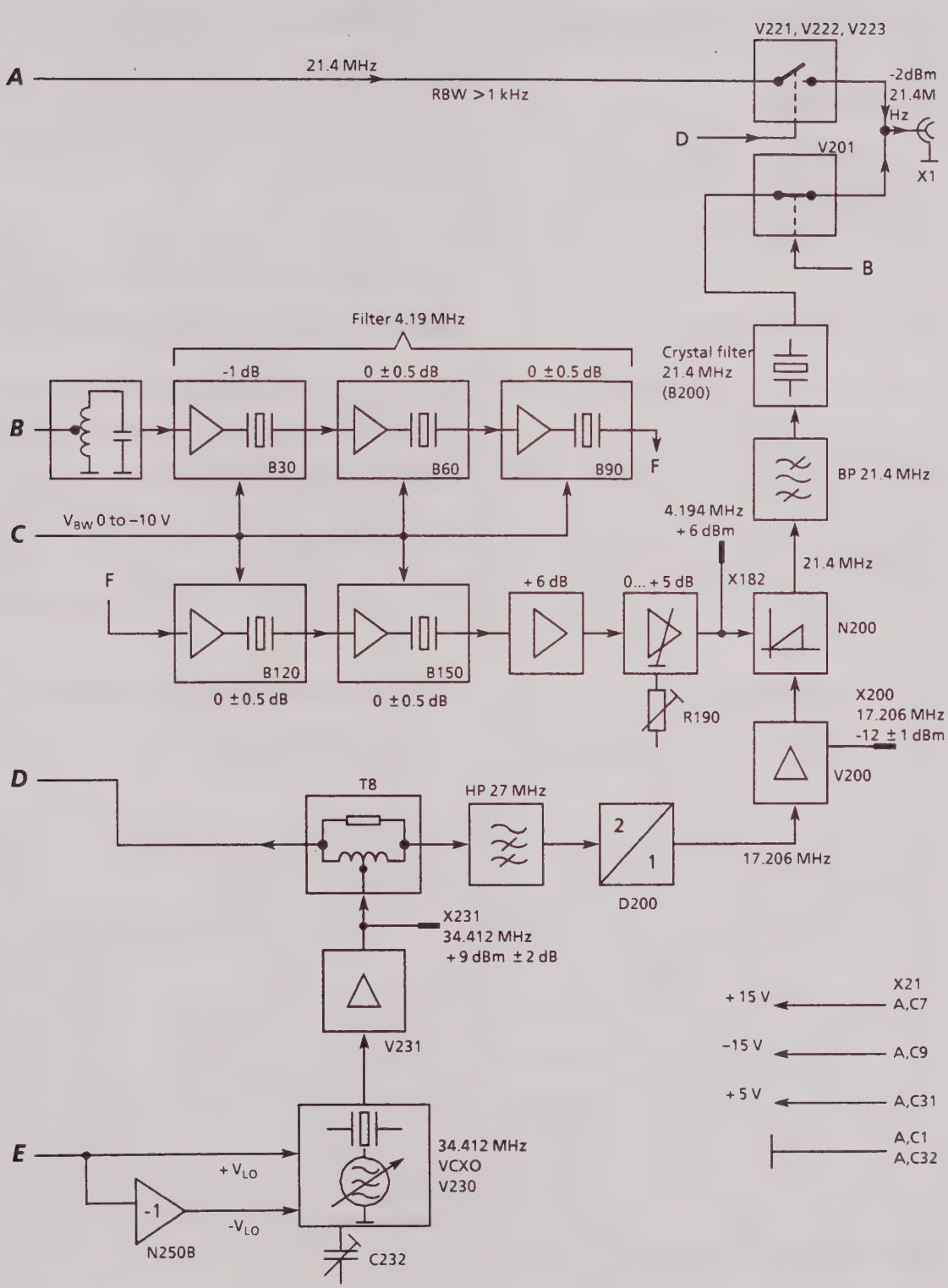

Fig. 6-2 Block diagram of IF filter 2 module (part 2)

6.2 Testing and Adjustment

Equipment required

- Digital voltmeter (DVM)
- Sweep generator with monitor or network analyer
- Spectrum analyzer (SA)

6.2.1 Power Supply

Pin	Voltage	Current
X21.A, C7	+15 V ± 0.3 V	250 to 380 mA
X21.A, C9	−15 V ± 0.3 V	70 to 100 mA
X21.A, C31	+5 V ± 0.2 V	90 to 130 mA
X21.A, C1, 32	0 V	---

6.2.2 Testing the Control

Check or set the following voltages using the DVM:

Data word in D251	Test point	Measured value
---	X50. A6	Adjust −10 V ± 20 mV using R287
128_{10}	X50. B4	} + 12 V to + 15 V
	B5	
	B6	} −12 V to −15 V
	B7	
	A8	−1.5 V to + 0.5 V
127_{10}	X50. B4	} −12 V to −15 V
	B5	
	B6	} + 12 V to + 15 V
	B7	
	A8	+ 14 V to + 15 V

6.2.3 Testing the LO D/A Converter

Data word in D250	Test point	Measured value
Ø	X50. A3	−1.4 V ± 0.2 V
	B3	+ 1.4 V ± 0.2 V
255_{10}	X50. A3	−11.4 V ± 0.2 V
	B3	+ 11.4 V ± 0.2 V

6.2.4 Testing the Function Network

- Rotate R278 to centre setting.

Data word in D251	Test point	Measured value
0	X50. A5	−0.00 V ± 50 mV
12		−0.05 V ± 50 mV
24		−0.1 V ± 50 mV
36		−0.22 V ± 0.1 V
48		−0.35 V ± 0.1 V
60		−0.62 V ± 0.1 V
72		−1.00 V ± 0.1 V
84		−1.65 V ± 0.1 V
96		−2.70 V ± 0.2 V
108		−4.15 V ± 0.2 V
120		−7.00 V ± 0.3 V
127		−9.50 V ± 0.4 V

6.2.5 Testing and Adjusting the Oscillator

Connect spectrum analyzer to X230/1,2.

(CF 34.412 MHz; SPAN 3 kHz; REF.LEV + 15 dBm)

Data in D250	Measured values or adjustment
127_{10} Ø 255_{10}	Adjust C232 to max. level (+ 10 ± 2 dBm) Measure frequency: 34.412 MHz (–600 to –1200 Hz) Measure frequency: 34.412 MHz (+ 600 to + 1200 Hz)
	Vary the data word in D250 until the oscillator frequency is 34.412 MHz ± 10 Hz; note data word (DF)

6.2.6 Final Adjustment

Both covers must be fitted.

Connect sweep generator with centre frequency 21.4 MHz/-10 dBm to X8 and monitor to X1.

Setting on module	Sweep generator span	Inserted jumpers	Measured values	Adjustment
a) 128_{10} /D251	20 MHz	—	–5 dBm ± 0.5 dB at 21.4 MHz	—
20_{10} /D251	100 kHz	X34 X61 X91 X121 X151		Adjust C211 and C229 • to maximum and level passband in range 21.4 MHz ± 1.5 kHz • Stopband attenuation at 21.45 MHz ≥ 35 dB
DF/D250 5_{10}/D251	20 kHz	X151 X121 X91 X61		C48 to centre C45 to symmetry
DF/D250 5_{10}/D251		X151 X121 X91 X34		C74 to centre C68 to symmetry
DF/D250 5_{10}/D251		X151 X121 X61 X34		C105 to centre C98 to symmetry
DF/D250 5_{10}/D251		X151 X91 X61 X34		C135 to centre C128 to symmetry
DF/D250 5_{10}/D251		X121 X91 X61 X34		C165 to centre C158 to symmetry
DF/D250 5_{10}/D251	2 kHz	—	–3-dB bandwidth 1 kHz ± 50 Hz	Adjust using R278

Setting on module	Sweep generator span	Measured values	Adjustment
DF_{10}/D250 120_{10}/D251	0 Hz	—	C161 C131 C101 Adjust to maximum C70 *) C42
$120_{10} \leftrightarrow 5_{10}$ in D251	0 Hz	Equal levels at two bandwidths ± 0.2 dB	R34 R65 R95 Equal contribution from R125 each *) R155
50_{10}/D251	0 Hz	Level as in a) + 1 dB	R190
5_{10}/D251	2 kHz 20 kHz	Measure –3-dB bandwidth Measure –60-dB bandwidth	
30_{10}/D251	500 Hz 5 kHz	Measure –3-dB bandwidth Measure –60-dB bandwidth	Calculate the shape factor $SF = \frac{\text{–60-dB bandwidth}}{\text{–3-dB bandwidth}}$ in each case; it must be < 11 at each bandwidth
55_{10}/D251	200 Hz 2 kHz	Measure –3-dB bandwidth Measure –60-dB bandwidth	
85_{10}/D251	50 Hz 500 Hz	Measure –3-dB bandwidth Measure –60-dB bandwidth	
115_{10}/D251	20 Hz 200 Hz	Measure –3-dB bandwidth Measure –60-dB bandwidth	

*) If one or more filter stages are repaired (e.g. crystals replaced), these stages must first be adjusted on their own with the cover open. Proceed in a similar manner to the final adjustment. Remove jumper in series with the crystal for the following filter stage.

6.3 Troubleshooting

Fault: No display or heavy damping with bandwidths >1 kHz.

- Check switch or control (V1 to V5 or V201; V221 to V223; D251; N252)
- Check 21.4-MHz amplifier (V220; V224)

Fault: No display or heavy damping with bandwidths 300 to 1000 Hz.

- Check switch or control (V1 to V5 or V201; V221 to V223; D251; N252; V258).
- Check local oscillator (spectrum analyzer at X231 or X200) (V230, V231, V200)
- Check divider with oscilloscope (D6, D200)
- Check mixer (D5, V8, V9, N200)

Fault: Heavy damping with bandwidths <30 Hz.

- Adjust crystal filter (C42, C70, C101, C131, C161) or check crystal; replace
- Adjust R34, R65, R95, R125, R155 or check amplifier or replace crystal

Fault: Bandwidth of 1 kHz cannot be set

- Check FETs or PIN diodes (e. g. V90; V64)
- Check function network and D/A converter (N251A; V250 to V254; D254; D251)

Fault: Bandwidths <30 Hz cannot be set

- Check function network and D/A converter (N251A; V250 to V254; D254; D251)
- Check PIN diodes (e. g. V64).

ROHDE&SCHWARZ

Schaltteillisten
Stromläufe
Bestückungspläne

Part lists
Circuit diagrams
Components plans

Listes des pièces détachées
Schémas de Circuit
Plans des composants

(R 29500 Bl 2)
095.1000 Bl. 2

Kennz. Comp.No.	Benennung Designation	Sachnummer Stock No.	Hersteller Manufacturer	Bezeichnung Designation	enthalten in contained in
B30	EQ 4,194MHZ SATZ=5 QUARZE QUARTZ CRYSTAL UNIT,FILT.	805.4424	MCCOY	R&S-ZCHNG.805.4424	
B60	EQ 4,194MHZ SATZ=5 QUARZE QUARTZ CRYSTAL UNIT,FILT.	805.4424	MCCOY	R&S-ZCHNG.805.4424	
B90	EQ 4,194MHZ SATZ=5 QUARZE QUARTZ CRYSTAL UNIT,FILT.	805.4424	MCCOY	R&S-ZCHNG.805.4424	
B120	EQ 4,194MHZ SATZ=5 QUARZE QUARTZ CRYSTAL UNIT,FILT.	805.4424	MCCOY	R&S-ZCHNG.805.4424	
B150	EQ 4,194MHZ SATZ=5 QUARZE QUARTZ CRYSTAL UNIT,FILT. 1 SATZ = 5 STCK.	805.4424	MCCOY	R&S-ZCHNG.805.4424	
B200	EP 21,4MHZ-BANDP. B3: 12K 21,4MHZ BANDPASS	805.4430	KVG	R&S-ZCHNG.805.4430	
B230	EQ 34,4105MHZ (3.)HC-49/U QUARTZ CRYSTAL UNIT	805.4418	KVG	R&S-ZCHNG.805.4418	
C1 ..4	CK 10NF+-5%63V5RM MKT CAPACITOR	CK 099.2869	WIMA	FKS 2/100/0,01UF/5%	
C5	CK 470PF +-1% 100V RM5 KP POLYPROPYLENE CAPACITOR	CK 007.7575	ROE	KP1830-147/011-R	
C6	CK 10NF+-5%63V5RM MKT CAPACITOR	CK 099.2869	WIMA	FKS 2/100/0,01UF/5%	
C8	CK 10NF+-5%63V5RM MKT CAPACITOR	CK 099.2869	WIMA	FKS 2/100/0,01UF/5%	
C10	CC 47PF+-2%5X6NPO CAPACITOR	CC 087.6506	VALVO	2222 678 10479	
C11	CC 47PF+-2%5X6NPO CAPACITOR	CC 087.6506	VALVO	2222 678 10479	
C12	CK 10NF+-5%63V5RM MKT CAPACITOR	CK 099.2869	WIMA	FKS 2/100/0,01UF/5%	
C13	CK 10NF+-5%63V5RM MKT CAPACITOR	CK 099.2869	WIMA	FKS 2/100/0,01UF/5%	
C14	CK 10NF+-5%63V5RM MKT CAPACITOR	CK 099.2869	WIMA	FKS 2/100/0,01UF/5%	
C15	CK 1,0NF +-1% 100V RM5 KP POLYPROPYLENE CAPACITOR	CK 007.7598	ROE	KP1830-210/011-R	
C16	CK 680PF +-1% 100V RM5 KP POLYPROPYLENE CAPACITOR	CK 007.7581	ROE	KP1830-168/011-R	
C17	CK 10NF+-5%63V5RM MKT CAPACITOR	CK 099.2869	WIMA	FKS 2/100/0,01UF/5%	
C18	CK 10NF+-5%63V5RM MKT CAPACITOR	CK 099.2869	WIMA	FKS 2/100/0,01UF/5%	
C19	CK 10NF+-5%63V5RM MKT CAPACITOR	CK 099.2869	WIMA	FKS 2/100/0,01UF/5%	
C20	CK 10NF+-5%63V5RM MKT CAPACITOR	CK 099.2869	WIMA	FKS 2/100/0,01UF/5%	
C21	CC 2,2NF+-10%5X6R2000 CAPACITOR	CC 087.7060	VALVO	2222 63051 222	
C22	CK 10NF+-5%63V5RM MKT CAPACITOR	CK 099.2869	WIMA	FKS 2/100/0,01UF/5%	
C23	CK 10NF+-5%63V5RM MKT CAPACITOR	CK 099.2869	WIMA	FKS 2/100/0,01UF/5%	
C24	CC 10NF-20+50%7X8R4000 CAPACITOR	CC 087.7525	VALVO	2222 63051 64051103	
C30	CC 150PF+-2%6X9N150 CAPACITOR	CC 087.6735	VALVO	2222 678 34151	
C31	CC 150PF+-2%6X9N150 CAPACITOR	CC 087.6735	VALVO	2222 678 34151	
C32 ..35	CK 100NF+-5%63V5RM MKT CAPACITOR	CK 099.2930	WIMA	MKS/2/63/0,1UF/5%	
C36	CC 4,7PF+-0,25PF3X4NPO CAPACITOR	CC 087.6387	VALVO	2222 678 09478	
C37	CK 100NF+-5%63V5RM MKT CAPACITOR	CK 099.2930	WIMA	MKS/2/63/0,1UF/5%	
C38	CK 100NF+-5%63V5RM MKT CAPACITOR	CK 099.2930	WIMA	MKS/2/63/0,1UF/5%	
C39	CC 39PF+-2%4X5NPO CAPACITOR	CC 087.6493	VALVO	2222 678 10399	
C40	CK 100NF+-5%63V5RM MKT CAPACITOR	CK 099.2930	WIMA	MKS/2/63/0,1UF/5%	
C41	CC 10PF+-0,25PF3X4NPO CAPACITOR	CC 087.6429	VALVO	2222 678 09109	
C42	CT 9,2PF TAUCHTR.RD 7X12 AIR-TYPE TRIMMER	CT 025.7373	TEKELEC	LUFTTRAT5201MMUTTER	
C44	CC 22 PF 2% NPO/IA 3 ROHR CERAMIC CAPACITOR	022.2335	DRALORIC	NPO/IA220IRD3X10LC	
C45	CT 4PF N033 7S-03 TRIMMER	CT 087.7190	STETTNER	7S TRIKO 03	

Kennz. Comp.No.	Benennung Designation	Sachnummer Stock No.	Hersteller Manufacturer	Bezeichnung Designation	enthalten in contained in
C46	CC 5,6PF+-0,25PF3X4NP0 CAPACITOR	CC 087.6393	VALVO	2222 678 09568	
C47	CK 10NF+-5%63V5RM MKT CAPACITOR	CK 099.2869	WIMA	FKS 2/100/0,01UF/5%	
C48	CT 15,5PF N750 ABGL OBEN DISC TRIMMER	CT 065.9677	STETTNER	7-STRIKO 03/4,5/20N7	
C49	CK 100NF+-5%63V5RM MKT CAPACITOR	CK 099.2930	WIMA	MKS/2/63/0,1UF/5%	
C60	CK 100NF+-5%63V5RM MKT CAPACITOR	CK 099.2930	WIMA	MKS/2/63/0,1UF/5%	
C61	CK 100NF+-5%63V5RM MKT CAPACITOR	CK 099.2930	WIMA	MKS/2/63/0,1UF/5%	
C63	CK 100NF+-5%63V5RM MKT CAPACITOR	CK 099.2930	WIMA	MKS/2/63/0,1UF/5%	
C64	CK 100NF+-5%63V5RM MKT CAPACITOR	CK 099.2930	WIMA	MKS/2/63/0,1UF/5%	
C65	CK 100NF+-5%63V5RM MKT CAPACITOR	CK 099.2930	WIMA	MKS/2/63/0,1UF/5%	
C66	CC 39PF+-2%4X5NP0 CAPACITOR	CC 087.6493	VALVO	2222 678 10399	
C67	CC 10PF+-0,25PF3X4NP0 CAPACITOR	CC 087.6429	VALVO	2222 678 09109	
C68	CT 4PF N033 7S-03 TRIMMER	CT 087.7190	STETTNER	7S TRIKO 03	
C69	CK 10NF+-5%63V5RM MKT CAPACITOR	CK 099.2869	WIMA	FKS 2/100/0,01UF/5%	
C70	CT 9,2PF TAUCHTR.RD 7X12 AIR-TYPE TRIMMER	CT 025.7373	TEKELEC	LUFTTRAT5201MMUTTER	
C71	CC 22 PF 2% NP0/IA 3 ROHR CERAMIC CAPACITOR	022.2335	DRALORIC	NP0/IA220IRD3X10LC	
C72	CC 2,2PF+-0,25PF3X4NP0 CAPACITOR	CC 087.6341	VALVO	2222 678 09228	
C73	CK 100NF+-5%63V5RM MKT CAPACITOR	CK 099.2930	WIMA	MKS/2/63/0,1UF/5%	
C74	CT 15,5PF N750 ABGL OBEN DISC TRIMMER	CT 065.9677	STETTNER	7-STRIKO 03/4,5/20N7	
C90	CK 100NF+-5%63V5RM MKT CAPACITOR	CK 099.2930	WIMA	MKS/2/63/0,1UF/5%	
C91	CK 100NF+-5%63V5RM MKT CAPACITOR	CK 099.2930	WIMA	MKS/2/63/0,1UF/5%	
C93	CK 100NF+-5%63V5RM MKT CAPACITOR	CK 099.2930	WIMA	MKS/2/63/0,1UF/5%	
C94	CC 39PF+-2%4X5NP0 CAPACITOR	CC 087.6493	VALVO	2222 678 10399	
C95	CK 100NF+-5%63V5RM MKT CAPACITOR	CK 099.2930	WIMA	MKS/2/63/0,1UF/5%	
C96	CK 100NF+-5%63V5RM MKT CAPACITOR	CK 099.2930	WIMA	MKS/2/63/0,1UF/5%	
C97	CC 10PF+-0,25PF3X4NP0 CAPACITOR	CC 087.6429	VALVO	2222 678 09109	
C98	CT 4PF N033 7S-03 TRIMMER	CT 087.7190	STETTNER	7S TRIKO 03	
C99	CC 5,6PF+-0,25PF3X4NP0 CAPACITOR	CC 087.6393	VALVO	2222 678 09568	
C100	CK 10NF+-5%63V5RM MKT CAPACITOR	CK 099.2869	WIMA	FKS 2/100/0,01UF/5%	
C101	CT 9,2PF TAUCHTR.RD 7X12 AIR-TYPE TRIMMER	CT 025.7373	TEKELEC	LUFTTRAT5201MMUTTER	
C102	CC 22 PF 2% NP0/IA 3 ROHR CERAMIC CAPACITOR	022.2335	DRALORIC	NP0/IA220IRD3X10LC	
C103	CC 2,2PF+-0,25PF3X4NP0 CAPACITOR	CC 087.6341	VALVO	2222 678 09228	
C104	CK 100NF+-5%63V5RM MKT CAPACITOR	CK 099.2930	WIMA	MKS/2/63/0,1UF/5%	
C105	CT 15,5PF N750 ABGL OBEN DISC TRIMMER	CT 065.9677	STETTNER	7-STRIKO 03/4,5/20N7	
C120	CK 100NF+-5%63V5RM MKT CAPACITOR	CK 099.2930	WIMA	MKS/2/63/0,1UF/5%	
C121	CK 100NF+-5%63V5RM MKT CAPACITOR	CK 099.2930	WIMA	MKS/2/63/0,1UF/5%	
C123	CK 100NF+-5%63V5RM MKT CAPACITOR	CK 099.2930	WIMA	MKS/2/63/0,1UF/5%	
C124	CK 100NF+-5%63V5RM MKT CAPACITOR	CK 099.2930	WIMA	MKS/2/63/0,1UF/5%	
C125	CC 39PF+-2%4X5NP0 CAPACITOR	CC 087.6493	VALVO	2222 678 10399	
C126	CK 100NF+-5%63V5RM MKT CAPACITOR	CK 099.2930	WIMA	MKS/2/63/0,1UF/5%	

Kennz. Comp.No.	Benennung Designation	Sachnummer Stock No.	Hersteller Manufacturer	Bezeichnung Designation	enthalten in contained in
C127	CC 10PF+-0,25PF3X4NP0 CAPACITOR	CC 087.6429	VALVO	2222 678 09109	
C128	CT 4PF N033 7S-03 TRIMMER	CT 087.7190	STETTNER	7S TRIKO 03	
C129	CC 5,6PF+-0,25PF3X4NP0 CAPACITOR	CC 087.6393	VALVO	2222 678 09568	
C130	CK 10NF+-5%63V5RM MKT CAPACITOR	CK 099.2869	WIMA	FKS 2/100/0,01UF/5%	
C131	CT 9,2PF TAUCHTR.RD 7X12 AIR-TYPE TRIMMER	CT 025.7373	TEKELEC	LUFTTRAT5201MMUTTER	
C132	CC 22 PF 2% NP0/IA 3 ROHR CERAMIC CAPACITOR	022.2335	DRALORIC	NP0/IA220IRD3X10LC	
C133	CC 2,2PF+-0,25PF3X4NP0 CAPACITOR	CC 087.6341	VALVO	2222 678 09228	
C134	CK 100NF+-5%63V5RM MKT CAPACITOR	CK 099.2930	WIMA	MKS/2/63/0,1UF/5%	
C135	CT 15,5PF N750 ABGL OBEN DISC TRIMMER	CT 065.9677	STETTNER	7-STRIKO 03/4,5/20N7	
C150	CK 100NF+-5%63V5RM MKT CAPACITOR	CK 099.2930	WIMA	MKS/2/63/0,1UF/5%	
C151	CK 100NF+-5%63V5RM MKT CAPACITOR	CK 099.2930	WIMA	MKS/2/63/0,1UF/5%	
C153	CK 100NF+-5%63V5RM MKT CAPACITOR	CK 099.2930	WIMA	MKS/2/63/0,1UF/5%	
C154	CK 100NF+-5%63V5RM MKT CAPACITOR	CK 099.2930	WIMA	MKS/2/63/0,1UF/5%	
C155	CC 39PF+-2%4X5NP0 CAPACITOR	CC 087.6493	VALVO	2222 678 10399	
C156	CK 100NF+-5%63V5RM MKT CAPACITOR	CK 099.2930	WIMA	MKS/2/63/0,1UF/5%	
C157	CC 10PF+-0,25PF3X4NP0 CAPACITOR	CC 087.6429	VALVO	2222 678 09109	
C158	CT 4PF N033 7S-03 TRIMMER	CT 087.7190	STETTNER	7S TRIKO 03	
C159	CC 5,6PF+-0,25PF3X4NP0 CAPACITOR	CC 087.6393	VALVO	2222 678 09568	
C160	CK 10NF+-5%63V5RM MKT CAPACITOR	CK 099.2869	WIMA	FKS 2/100/0,01UF/5%	
C161	CT 9,2PF TAUCHTR.RD 7X12 AIR-TYPE TRIMMER	CT 025.7373	TEKELEC	LUFTTRAT5201MMUTTER	
C162	CC 22 PF 2% NP0/IA 3 ROHR CERAMIC CAPACITOR	022.2335	DRALORIC	NP0/IA220IRD3X10LC	
C163	CC 2,2PF+-0,25PF3X4NP0 CAPACITOR	CC 087.6341	VALVO	2222 678 09228	
C164	CK 100NF+-5%63V5RM MKT CAPACITOR	CK 099.2930	WIMA	MKS/2/63/0,1UF/5%	
C165	CT 15,5PF N750 ABGL OBEN DISC TRIMMER	CT 065.9677	STETTNER	7-STRIKO 03/4,5/20N7	
C180	CK 100NF+-5%63V5RM MKT CAPACITOR	CK 099.2930	WIMA	MKS/2/63/0,1UF/5%	
C181	CK 100NF+-5%63V5RM MKT CAPACITOR	CK 099.2930	WIMA	MKS/2/63/0,1UF/5%	
C182	CK 100NF+-5%63V5RM MKT CAPACITOR	CK 099.2930	WIMA	MKS/2/63/0,1UF/5%	
C183	CK 100NF+-5%63V5RM MKT CAPACITOR	CK 099.2930	WIMA	MKS/2/63/0,1UF/5%	
C184	CC 4,7PF+-0,25PF3X4NP0 CAPACITOR	CC 087.6387	VALVO	2222 678 09478	
C185	CK 100NF+-5%63V5RM ·· MKT CAPACITOR	CK 099.2930	WIMA	MKS/2/63/0,1UF/5%	
C186	CK 100NF+-5%63V5RM MKT CAPACITOR	CK 099.2930	WIMA	MKS/2/63/0,1UF/5%	
C187	CK 100NF+-5%63V5RM MKT CAPACITOR	CK 099.2930	WIMA	MKS/2/63/0,1UF/5%	
C189	CK 470PF +-1% 100V RM5 KP POLYPROPYLENE CAPACITOR	CK 007.7575	ROE	KP1830-147/011-R	
C199	CC 10NF-20+50%7X8R4000 CAPACITOR	CC 087.7525	VALVO	2222 63051 64051103	
C200	CC 2,2NF+-10%5X6R2000 CAPACITOR	CC 087.7060	VALVO	2222 63051 222	
C201	CK 10NF+-5%63V5RM MKT CAPACITOR	CK 099.2869	WIMA	FKS 2/100/0,01UF/5%	
C202	CK 10NF+-5%63V5RM MKT CAPACITOR	CK 099.2869	WIMA	FKS 2/100/0,01UF/5%	
C203	CK 10NF+-5%63V5RM MKT CAPACITOR	CK 099.2869	WIMA	FKS 2/100/0,01UF/5%	
C204	CC 18PF+-2%3X4NP0 CAPACITOR	CC 087.6458	VALVO	2222 678 10189	

Kennz. Comp.No.	Benennung Designation	Sachnummer Stock No.	Hersteller Manufacturer	Bezeichnung Designation	enthalten in contained in
C205	CC 10NF-20+50%7X8R4000 CAPACITOR	CC 087.7525	VALVO	2222 63051 64051103	
C206	CK 10NF+-5%63V5RM MKT CAPACITOR	CK 099.2869	WIMA	FKS 2/100/0,01UF/5%	
C207	CC 56PF+-2%5X6NP0 CAPACITOR	CC 087.6512	VALVO	2222 678 10569	
C208	CK 330PF+-2,5%63V # POLYPROPYLENE CAPACITOR	099.6093	WIMA	FKP2 330/2,5%/63V	
C209	CK 330PF+-2,5%63V # POLYPROPYLENE CAPACITOR	099.6093	WIMA	FKP2 330/2,5%/63V	
C210	CC 27PF+-2%4X5NP0 CAPACITOR	CC 087.6470	VALVO	2222 678 10279	
C211	CT 15,5PF N750 ABGL OBEN DISC TRIMMER	CT 065.9677	STETTNER	7-STRIKO 03/4,5/20N7	
C213	CK 10NF+-5%63V5RM MKT CAPACITOR	CK 099.2869	WIMA	FKS 2/100/0,01UF/5%	
C214	CK 10NF+-5%63V5RM MKT CAPACITOR	CK 099.2869	WIMA	FKS 2/100/0,01UF/5%	
C216	CK 10NF+-5%63V5RM MKT CAPACITOR	CK 099.2869	WIMA	FKS 2/100/0,01UF/5%	
C217	CK 10NF+-5%63V5RM MKT CAPACITOR	CK 099.2869	WIMA	FKS 2/100/0,01UF/5%	
C220	CK 10NF+-5%63V5RM MKT CAPACITOR	CK 099.2869	WIMA	FKS 2/100/0,01UF/5%	
C221	CK 10NF+-5%63V5RM MKT CAPACITOR	CK 099.2869	WIMA	FKS 2/100/0,01UF/5%	
C222	CC 1,5PF+-0,25PF3X4P100 CAPACITOR	CC 087.6193	VALVO	2222 678 03158	
C223	CK 10NF+-5%63V5RM MKT CAPACITOR	CK 099.2869	WIMA	FKS 2/100/0,01UF/5%	
C224	CK 10NF+-5%63V5RM MKT CAPACITOR	CK 099.2869	WIMA	FKS 2/100/0,01UF/5%	
C225	CK 10NF+-5%63V5RM MKT CAPACITOR	CK 099.2869	WIMA	FKS 2/100/0,01UF/5%	
C226	CK 10NF+-5%63V5RM MKT CAPACITOR	CK 099.2869	WIMA	FKS 2/100/0,01UF/5%	
C227	CK 10NF+-5%63V5RM MKT CAPACITOR	CK 099.2869	WIMA	FKS 2/100/0,01UF/5%	
C228	CC 22PF+-2%4X5NP0 CAPACITOR	CC 087.6464	VALVO	2222 678 10229	
C229	CT 15,5PF N750 ABGL OBEN DISC TRIMMER	CT 065.9677	STETTNER	7-STRIKO 03/4,5/20N7	
C230	CC 2,2NF+-10%5X6R2000 CAPACITOR	CC 087.7060	VALVO	2222 63051 222	
C231	CC 82PF+-2%6X7NP0 CAPACITOR	CC 087.6535	VALVO	2222 678 10829	
C232	CT 9,5PF N470 ABGL.OBEN CERAMIC TRIMMER	CT 080.0625	STETTNER	7S-TRIK006/3,5/13N47	
C233	CC 47PF+-2%5X6NP0 CAPACITOR	CC 087.6506	VALVO	2222 678 10479	
C234	CC 270PF+-2%6X9N750 CAPACITOR	CC 087.6958	DRALORIC	EDPU6X9/270/2%N750	
C235	CC 220PF+-2%6X7N750 CAPACITOR	CC 087.6941	VALVO	2222 678 58221	
C236	CC 2,2NF+-10%5X6R2000 CAPACITOR	CC 087.7060	VALVO	2222 63051 222	
C237	CC 10NF-20+50%7X8R4000 CAPACITOR	CC 087.7525	VALVO	2222 63051 64051103	
C238	CK 330PF+-2,5%63V # POLYPROPYLENE CAPACITOR	099.6093	WIMA	FKP2 330/2,5%/63V	
C239	CC 150PF+-2%6X9N150 CAPACITOR	CC 087.6735	VALVO	2222 678 34151	
C240	CC 2,2NF+-10%5X6R2000 CAPACITOR	CC 087.7060	VALVO	2222 63051 222	
C241	CC 100PF+-2%6X9NP0 CAPACITOR	CC 087.6541	VALVO	2222 678 10101	
C242	CC 68PF+-2%6X7NP0 CAPACITOR	CC 087.6529	VALVO	2222 678 10689	
C243	CC 100PF+-2%6X9NP0 CAPACITOR	CC 087.6541	VALVO	2222 678 10101	
C250 ..255	CK 10NF+-5%63V5RM MKT CAPACITOR	CK 099.2869	WIMA	FKS 2/100/0,01UF/5%	
C256	CC 220PF+-2%6X7N750 CAPACITOR	CC 087.6941	VALVO	2222 678 58221	
C257	CC 220PF+-2%6X7N750 CAPACITOR	CC 087.6941	VALVO	2222 678 58221	
C258	CK 1UF+-10%50V5RM MKT CAPACITOR	CK 099.2998	WIMA	MKS2/50/1UF/10%	

Kennz. Comp.No.	Benennung Designation	Sachnummer Stock No.	Hersteller Manufacturer	Bezeichnung Designation	enthalten in contained in
C259	CC 10NF-20+50%7X8R4000 CAPACITOR	CC 087.7525	VALVO	2222 63051 64051103	
C260	CE 100UF-10+50% 25V 13X13 ELECTROLYTIC CAPACITOR	CE 208.4007	ROEDERST	ELKOEK100/25	
C261	CC 5,6PF+-0,25PF3X4NP0 CAPACITOR	CC 087.6393	VALVO	2222 678 09568	
C395	CK 100NF+-5%63V5RM MKT CAPACITOR	CK 099.2930	WIMA	MKS/2/63/0,1UF/5%	
C396	CC 4,7PF+-0,25PF3X4NP0 CAPACITOR	CC 087.6387	VALVO	2222 678 09478	
D5	BJ SD5000N 4X ANALOGSCH BJ SD5000N 4XANALOGSWITCH	BJ 342.2340	SILICONIX	SD5000N	
D6	BL SN74S112N-S1 2XJK-FLIP FLIP-FLOP	102.8045	TEXAS INST	SN74S112N-S1	
D200	BL SN74S112N-S1 2XJK-FLIP FLIP-FLOP	102.8045	TEXAS INST	SN74S112N-S1	
D250	BL PC74HC377P 8XD-FF EN OCTAL D-FLIP-FLOP	BL 806.0045	VALVO	PC74HC377P	
D251	BL PC74HC377P 8XD-FF EN OCTAL D-FLIP-FLOP	BL 806.0045	VALVO	PC74HC377P	
D252	BL MM74HC138N 3/8L.DECDD 3-TO-8 LINE DECODER	BL 571.3165	MOTOROLA	MC74HC138N	
D253	BJ MC1408L-8 8B.DA-CONV D/A-CONVERTER	BJ 280.9799	MOTOROLA	MC1408L-8	
D254	BJ MC1408L-8 8B.DA-CONV D/A-CONVERTER	BJ 280.9799	MOTOROLA	MC1408L-8	
L1	LD 100 UH10%8,000HMO,084A CHOKE	LD 067.3101	DELEVAN	DROSSEL1025-68	
L2	LD 22,0UH10%3,300HMO,114A CHOKE	LD 067.3024	DELEVAN	DROSSEL1025-52	
L5	LD 1,50UH10%0,220HMO,560A CHOKE	LD 067.2886	DELEVAN	DROSSEL 1025-24	
L6	LD 2,20UH10%0,400HMO,415A CHOKE	LD 067.2905	DELEVAN	DROSSEL1025-28	
L7	LD 2,20UH10%0,400HMO,415A CHOKE	LD 067.2905	DELEVAN	DROSSEL1025-28	
L8	LD 100 UH10%8,000HMO,084A CHOKE	LD 067.3101	DELEVAN	DROSSEL1025-68	
L10	LF ROHRK.RD3,5X1,2X3 GETR TUBLAR CORE	LF 026.9257			
L11	LF ROHRK.RD3,5X1,2X3 GETR TUBLAR CORE	LF 026.9257			
L30 ..33	LF ROHRK.RD3,5X1,2X3 GETR TUBLAR CORE	LF 026.9257			
L34	LD 3,30UH10%0,850HMO,285A CHOKE	LD 067.2928	DELEVAN	DROSSEL1025-32	
L35	LD 2,20UH10%0,400HMO,415A CHOKE	LD 067.2905	DELEVAN	DROSSEL1025-28	
L36	LD 100 UH10%8,000HMO,084A CHOKE	LD 067.3101	DELEVAN	DROSSEL1025-68	
L37	LD 100 UH10%8,000HMO,084A CHOKE	LD 067.3101	DELEVAN	DROSSEL1025-68	
L38	LD 47,0UH10%4,500HMO,110A CHOKE	LD 067.3060	DELEVAN	DROSSEL1025-60	
L39	LD 47,0UH10%4,500HMO,110A CHOKE	LD 067.3060	DELEVAN	DROSSEL1025-60	
L61	LF ROHRK.RD3,5X1,2X3 GETR TUBLAR CORE	LF 026.9257			
L62	LD 100 UH10%8,000HMO,084A CHOKE	LD 067.3101	DELEVAN	DROSSEL1025-68	
L63	LD 47,0UH10%4,500HMO,110A CHOKE	LD 067.3060	DELEVAN	DROSSEL1025-60	
L64	LD 47,0UH10%4,500HMO,110A CHOKE	LD 067.3060	DELEVAN	DROSSEL1025-60	
L91	LF ROHRK.RD3,5X1,2X3 GETR TUBLAR CORE	LF 026.9257			
L92	LD 100 UH10%8,000HMO,084A CHOKE	LD 067.3101	DELEVAN	DROSSEL1025-68	
L93	LD 47,0UH10%4,500HMO,110A CHOKE	LD 067.3060	DELEVAN	DROSSEL1025-60	
L94	LD 47,0UH10%4,500HMO,110A CHOKE	LD 067.3060	DELEVAN	DROSSEL1025-60	
L121	LF ROHRK.RD3,5X1,2X3 GETR TUBLAR CORE	LF 026.9257			
L122	LD 100 UH10%8,000HMO,084A CHOKE	LD 067.3101	DELEVAN	DROSSEL1025-68	

uns alle Rechte vor

Kennz. Comp.No.	Benennung Designation	Sachnummer Stock No.	Hersteller Manufacturer	Bezeichnung Designation	enthalten in contained in
L123	LD 47,0UH10%4,500HMO,110A CHOKE	LD 067.3060	DELEVAN	DROSSEL1025-60	
L124	LD 47,0UH10%4,500HMO,110A CHOKE	LD 067.3060	DELEVAN	DROSSEL1025-60	
L151	LF ROHRK.RD3,5X1,2X3 GETR TUBLAR CORE	LF 026.9257			
L152	LD 100 UH10%8,000HMO,084A CHOKE	LD 067.3101	DELEVAN	DROSSEL1025-68	
L153	LD 47,0UH10%4,500HMO,110A CHOKE	LD 067.3060	DELEVAN	DROSSEL1025-60	
L154	LD 47,0UH10%4,500HMO,110A CHOKE	LD 067.3060	DELEVAN	DROSSEL1025-60	
L180	LF ROHRK.RD3,5X1,2X3 GETR TUBLAR CORE	LF 026.9257			
L181	LF ROHRK.RD3,5X1,2X3 GETR TUBLAR CORE	LF 026.9257			
L182	LD 8,20UH10%2,700HMO,160A CHOKE	LD 067.2970	DELEVAN	DROSSEL1025-42	
L183	LD 4,70UH10%1,200HMO,239A CHOKE	LD 067.2940	DELEVAN	DROSSEL1025-36	
L200	LD 2,20UH10%0,400HMO,415A CHOKE	LD 067.2905	DELEVAN	DROSSEL1025-28	
L201	LD 15,0UH10%2,800HMO,157A CHOKE	LD 067.3001	DELEVAN	DROSSEL1025-48	
L202	LD 1,80UH10%0,300HMO,480A CHOKE	LD 067.2892	DELEVAN	DROSSEL1025-26	
L203	LD 1,00UH10%1,000HMO,390A CHOKE	LD 067.2863	DELEVAN	1025-20	
L204	LD 100NH 10% 0,080HM 1,4A CHOKE	LD 067.2740	DELEVAN	DROSSEL1025-94	
L205	LD 1,80UH10%0,300HMO,480A CHOKE	LD 067.2892	DELEVAN	DROSSEL1025-26	
L206	LD 100 UH10%8,000HMO,084A CHOKE	LD 067.3101	DELEVAN	DROSSEL1025-68	
L207	LD 22,0UH10%3,300HMO,114A CHOKE	LD 067.3024	DELEVAN	DROSSEL1025-52	
L208	LD 22,0UH10%3,300HMO,114A CHOKE	LD 067.3024	DELEVAN	DROSSEL1025-52	
L209	LF ROHRK.RD3,5X1,2X3 GETR TUBLAR CORE	LF 026.9257			
L219	LD 5,60UH10%1,800HMO,195A CHOKE	LD 067.2957	DELEVAN	DROSSEL1025-38	
L220	LF ROHRK.RD3,5X1,2X8 GETR TUBLAR CORE	LF 026.9257			
L221	LD 15,0UH10%2,800HMO,157A CHOKE	LD 067.3001	DELEVAN	DROSSEL1025-48	
L222	LD 100 UH10%8,000HMO,084A CHOKE	LD 067.3101	DELEVAN	DROSSEL1025-68	
L223	LF ROHRK.RD3,5X1,2X3 GETR TUBLAR CORE	LF 026.9257			
L225	LD 1,80UH10%0,300HMO,480A CHOKE	LD 067.2892	DELEVAN	DROSSEL1025-26	
L230	LF ROHRK.RD3,5X1,2X3 GETR TUBLAR CORE	LF 026.9257			
L231	LF ROHRK.RD3,5X1,2X3 GETR TUBLAR CORE	LF 026.9257			
L232	LD 0,39UH10%0,300HMO,710A CHOKE	LD 067.2811	DELEVAN	DROSSEL1025-10	
L233	LD 5,60UH10%1,800HMO,195A CHOKE	LD 067.2957	DELEVAN	DROSSEL1025-38	
L234	LD 47,0UH10%4,500HMO,110A CHOKE	LD 067.3060	DELEVAN	DROSSEL1025-60	
L235	LD 0,22UH10%0,140HM1,045A CHOKE	LD 067.2786	DELEVAN	DROSSEL1025-04	
L236	LD 0,18UH10%0,120HM1,120A CHOKE	LD 067.2770	DELEVAN	DROSSEL1025-02	
L237	LD 0,18UH10%0,120HM1,120A CHOKE	LD 067.2770	DELEVAN	DROSSEL1025-02	
L250	LD 1,20UH10%0,180HMO,620A CHOKE	LD 067.2870	DELEVAN	DROSSEL1025-22	
L251	LD 1,20UH10%0,180HMO,620A CHOKE	LD 067.2870	DELEVAN	DROSSEL1025-22	
L252	LD 1,20UH10%0,180HMO,620A CHOKE	LD 067.2870	DELEVAN	DROSSEL1025-22	
L396 ..399	LD 100 UH10%8,000HMO,084A CHOKE	LD 067.3101	DELEVAN	DROSSEL1025-68	
L400	LD 100 UH10%8,000HMO,084A CHOKE	LD 067.3101	DELEVAN	DROSSEL1025-68	

Kennz. Comp.No.	Benennung Designation	Sachnummer Stock No.	Hersteller Manufacturer	Bezeichnung Designation	enthalten in contained in
N30	BO LF156J BIFET OPAMP OPERATIONAL AMPLIFIER	BO 645.7251	MOTOROLA	LF156J	
N60	BO LF156J BIFET OPAMP OPERATIONAL AMPLIFIER	BO 645.7251	MOTOROLA	LF156J	
N90	BO LF156J BIFET OPAMP OPERATIONAL AMPLIFIER	BO 645.7251	MOTOROLA	LF156J	
N120	BO LF156J BIFET OPAMP OPERATIONAL AMPLIFIER	BO 645.7251	MOTOROLA	LF156J	
N150	BO LF156J BIFET OPAMP OPERATIONAL AMPLIFIER	BO 645.7251	MOTOROLA	LF156J	
N200	BM TAK1H MIXER 0.5GHZ MIXER	BM 568.2284	MCL	TAK1H	
N250	BO LF412CN 2XFET OPAMP OPERATIONAL AMPLIFIER	356.0521	NSC	LF412CN	
N251	BO LF412CN 2XFET OPAMP OPERATIONAL AMPLIFIER	356.0521	NSC	LF412CN	
N252	BO LM124J 4XL.P.OPAMP OPERATIONAL AMPLIFIER	300.6353	NSC	LM124J	
N253	BO LF412CN 2XFET OPAMP OPERATIONAL AMPLIFIER	356.0521	NSC	LF412CN	
R1	RL 0,35W 2,74KOHM+-1%TK50 RESISTOR	RL 083.0926	DRALORIC	SMA0207/2,74K-F-D	
R2	RL 0,35W 2,74KOHM+-1%TK50 RESISTOR	RL 083.0926	DRALORIC	SMA0207/2,74K-F-D	
R3	RL 0,35W 2,74KOHM+-1%TK50 RESISTOR	RL 083.0926	DRALORIC	SMA0207/2,74K-F-D	
R8	RL 0,35W 11,0KOHM+-1%TK50 RESISTOR	RL 083.1322	DRALORIC	SMA0207/11K-F-D	
R9	RL 0,35W 11,0KOHM+-1%TK50 RESISTOR	RL 083.1322	DRALORIC	SMA0207/11K-F-D	
R10	RL 0,35W 100KOHM+-1%TK50 RESISTOR	RL 082.1764	DRALORIC	SMA0207/100K-F-C	
R11	RL 0,35W 47,5 OHM+-1%TK50 RESISTOR	RL 082.9507	DRALORIC	SMA0207/47,5OHM-F-D	
R12	RL 0,35W 47,5 OHM+-1%TK50 RESISTOR	RL 082.9507	DRALORIC	SMA0207/47,5OHM-F-D	
R13	RL 0,35W 47,5 OHM+-1%TK50 RESISTOR	RL 082.9507	DRALORIC	SMA0207/47,5OHM-F-D	
R14	RL 0,35W 2,74KOHM+-1%TK50 RESISTOR	RL 083.0926	DRALORIC	SMA0207/2,74K-F-D	
R15	RL 0,35W 2,74KOHM+-1%TK50 RESISTOR	RL 083.0926	DRALORIC	SMA0207/2,74K-F-D	
R16	RL 0,35W 150 OHM+-1%TK50 RESISTOR	RL 082.9942	DRALORIC	SMA0207/150OHM-F-D	
R17	RL 0,35W 1KOHM+-1%TK50 RESISTOR	RL 082.2160	DRALORIC	SMA0207/1K-F-C	
R18	RL 0,35W 4,75KOHM+-1%TK50 RESISTOR	RL 083.1097	DRALORIC	SMA0207/4,75K-F-D	
R19	RL 0,35W 27,4KOHM+-1%TK50 RESISTOR	RL 082.2583	DRALORIC	SMA 0207/27,4K-F-C	
R20	RL 0,35W 27,4KOHM+-1%TK50 RESISTOR	RL 082.2583	DRALORIC	SMA 0207/27,4K-F-C	
R30	RL 0,35W 511 OHM+-1%TK50 RESISTOR	RL 083.0426	DRALORIC	SMA0207/511OHM-F-D	
R31	RL 0,35W 10,0KOHM+-1%TK50 RESISTOR	RL 083.1297	DRALORIC	SMA0207/10K-F-D	
R32	RL 0,35W 6,81KOHM+-1%TK50 RESISTOR	RL 082.2560	DRALORIC	SMA 0207/6,81K-F-C	
R33	RL 0,35W 47,5 OHM+-1%TK50 RESISTOR	RL 082.9507	DRALORIC	SMA0207/47,5OHM-F-D	
R34	RS 0,3W 50 OHM+-10%CERMET TRIMMING POTENTIOMETER	RS 006.9122	BECKMAN	67W 500HM 10%	
R35	RL 0,35W 432 OHM+-1%TK50 DEPOS.-CARBON RESISTOR	RL 083.0355	DRALORIC	SMA0207/432OHM-F-D	
R36	RL 0,35W 475 OHM+-1%TK50 RESISTOR	RL 083.0390	DRALORIC	SMA0207/475OHM-F-D	
R37	RL 0,35W 1KOHM+-1%TK50 RESISTOR	RL 082.2160	DRALORIC	SMA0207/1K-F-C	
R38	RL 0,35W 200 OHM+-1%TK50 RESISTOR	RL 083.0049	DRALORIC	SMA0207/200OHM-F-D	
R39	RL 0,35W 4,32KOHM+-1%TK50 RESISTOR	RL 082.6572	DRALORIC	SMA0207/4,32K-F-D	
R40	RL 0,35W 6,81KOHM+-1%TK50 RESISTOR	RL 082.2560	DRALORIC	SMA 0207/6,81K-F-C	
R41	RL 0,35W 562 OHM+-1%TK50 RESISTOR	RL 083.0461	DRALORIC	SMA0207/562OHM-F-D	

Kennz. Comp.No.	Benennung Designation	Sachnummer Stock No.	Hersteller Manufacturer	Bezeichnung Designation	enthalten in contained in
R42	RL 0,35W 562 OHM+-1%TK50 RESISTOR	RL 083.0461	DRALORIC	SMA0207/562OHM-F-D	
R43	RL 0,35W22,10 OHM+-1%TK50 RESISTOR	RL 082.9188	DRALORIC	SMA0207/22,1OHM-F-D	
R44	RL 0,35W 47,5 OHM+-1%TK50 RESISTOR	RL 082.9507	DRALORIC	SMA0207/47,5OHM-F-D	
R45	RL 0,35W 5,62KOHM+-1%TK50 RESISTOR	RL 082.2190	DRALORIC	SMA0207/5,62K-F-C	
R46	RL 0,35W 5,62KOHM+-1%TK50 RESISTOR	RL 082.2190	DRALORIC	SMA0207/5,62K-F-C	
R47	RL 0,35W 475 OHM+-1%TK50 RESISTOR	RL 083.0390	DRALORIC	SMA0207/475OHM-F-D	
R48	RL 0,35W 2,74KOHM+-1%TK50 RESISTOR	RL 083.0926	DRALORIC	SMA0207/2,74K-F-D	
R49	RL 0,35W2,71KOHM+-0,1%T25 RESISTOR	RL 083.9975	DRALORIC	SMA0207/2,71K-B-E	
R60	RL 0,35W 100KOHM+-1%TK50 RESISTOR	RL 082.1764	DRALORIC	SMA0207/100K-F-C	
R61	RL 0,35W 100KOHM+-1%TK50 RESISTOR	RL 082.1764	DRALORIC	SMA0207/100K-F-C	
R62	RL 0,35W 150 OHM+-1%TK50 RESISTOR	RL 082.9942	DRALORIC	SMA0207/150OHM-F-D	
R63	RL 0,35W 475 OHM+-1%TK50 RESISTOR	RL 083.0390	DRALORIC	SMA0207/475OHM-F-D	
R64	RL 0,35W 47,5 OHM+-1%TK50 RESISTOR	RL 082.9507	DRALORIC	SMA0207/47,5OHM-F-D	
R65	RS 0,3W 50 OHM+-10%CERMET TRIMMING POTENTIOMETER	RS 006.9122	BECKMAN	67W 500HM 10%	
R66	RL 0,35W 432 OHM+-1%TK50 DEPOS.-CARBON RESISTOR	RL 083.0355	DRALORIC	SMA0207/432OHM-F-D	
R67	RL 0,35W 8,25KOHM+-1%TK50 RESISTOR	RL 083.1239	DRALORIC	SMA0207/8,25K-F-D	
R68	RL 0,35W 562 OHM+-1%TK50 RESISTOR	RL 083.0461	DRALORIC	SMA0207/562OHM-F-D	
R69	RL 0,35W 562 OHM+-1%TK50 RESISTOR	RL 083.0461	DRALORIC	SMA0207/562OHM-F-D	
R70	RL 0,35W 150 OHM+-1%TK50 RESISTOR	RL 082.9942	DRALORIC	SMA0207/150OHM-F-D	
R72	RL 0,35W 4,75KOHM+-1%TK50 RESISTOR	RL 083.1097	DRALORIC	SMA0207/4,75K-F-D	
R73	RL 0,35W22,10 OHM+-1%TK50 RESISTOR	RL 082.9188	DRALORIC	SMA0207/22,1OHM-F-D	
R74	RL 0,35W 47,5 OHM+-1%TK50 RESISTOR	RL 082.9507	DRALORIC	SMA0207/47,5OHM-F-D	
R75	RL 0,35W 5,62KOHM+-1%TK50 RESISTOR	RL 082.2190	DRALORIC	SMA0207/5,62K-F-C	
R76	RL 0,35W 5,62KOHM+-1%TK50 RESISTOR	RL 082.2190	DRALORIC	SMA0207/5,62K-F-C	
R77	RL 0,35W 475 OHM+-1%TK50 RESISTOR	RL 083.0390	DRALORIC	SMA0207/475OHM-F-D	
R78	RL 0,35W 2,74KOHM+-1%TK50 RESISTOR	RL 083.0926	DRALORIC	SMA0207/2,74K-F-D	
R79	RL 0,35W2,71KOHM+-0,1%T25 RESISTOR	RL 083.9975	DRALORIC	SMA0207/2,71K-B-E	
R90	RL 0,35W 100KOHM+-1%TK50 RESISTOR	RL 082.1764	DRALORIC	SMA0207/100K-F-C	
R91	RL 0,35W 100KOHM+-1%TK50 RESISTOR	RL 082.1764	DRALORIC	SMA0207/100K-F-C	
R92	RL 0,35W 150 OHM+-1%TK50 RESISTOR	RL 082.9942	DRALORIC	SMA0207/150OHM-F-D	
R93	RL 0,35W 475 OHM+-1%TK50 RESISTOR	RL 083.0390	DRALORIC	SMA0207/475OHM-F-D	
R94	RL 0,35W 47,5 OHM+-1%TK50 RESISTOR	RL 082.9507	DRALORIC	SMA0207/47,5OHM-F-D	
R95	RS 0,3W 50 OHM+-10%CERMET TRIMMING POTENTIOMETER	RS 006.9122	BECKMAN	67W 500HM 10%	
R96	RL 0,35W 432 OHM+-1%TK50 DEPOS.-CARBON RESISTOR	RL 083.0355	DRALORIC	SMA0207/432OHM-F-D	
R97	RL 0,35W 8,25KOHM+-1%TK50 RESISTOR	RL 083.1239	DRALORIC	SMA0207/8,25K-F-D	
R98	RL 0,35W 562 OHM+-1%TK50 RESISTOR	RL 083.0461	DRALORIC	SMA0207/562OHM-F-D	
R99	RL 0,35W 562 OHM+-1%TK50 RESISTOR	RL 083.0461	DRALORIC	SMA0207/562OHM-F-D	
R100	RL 0,35W22,10 OHM+-1%TK50 RESISTOR	RL 082.9188	DRALORIC	SMA0207/22,1OHM-F-D	
R101	RL 0,35W 150 OHM+-1%TK50 RESISTOR	RL 082.9942	DRALORIC	SMA0207/150OHM-F-D	

Kennz. Comp.No.	Benennung Designation	Sachnummer Stock No.	Hersteller Manufacturer	Bezeichnung Designation	enthalten in contained in
R103	RL 0,35W 4,75KOHM+-1%TK50 RESISTOR	RL 083.1097	DRALORIC	SMA0207/4,75K-F-D	
R104	RL 0,35W 47,5 OHM+-1%TK50 RESISTOR	RL 082.9507	DRALORIC	SMA0207/47,50HM-F-D	
R105	RL 0,35W 5,62KOHM+-1%TK50 RESISTOR	RL 082.2190	DRALORIC	SMA0207/5,62K-F-C	
R106	RL 0,35W 5,62KOHM+-1%TK50 RESISTOR	RL 082.2190	DRALORIC	SMA0207/5,62K-F-C	
R107	RL 0,35W 475 OHM+-1%TK50 RESISTOR	RL 083.0390	DRALORIC	SMA0207/4750HM-F-D	
R108	RL 0,35W 2,74KOHM+-1%TK50 RESISTOR	RL 083.0926	DRALORIC	SMA0207/2,74K-F-D	
R109	RL 0,35W2,71KOHM+-0,1%T25 RESISTOR	RL 083.9975	DRALORIC	SMA0207/2,71K-B-E	
R120	RL 0,35W 100KOHM+-1%TK50 RESISTOR	RL 082.1764	DRALORIC	SMA0207/100K-F-C	
R121	RL 0,35W 100KOHM+-1%TK50 RESISTOR	RL 082.1764	DRALORIC	SMA0207/100K-F-C	
R122	RL 0,35W 150 OHM+-1%TK50 RESISTOR	RL 082.9942	DRALORIC	SMA0207/1500HM-F-D	
R123	RL 0,35W 475 OHM+-1%TK50 RESISTOR	RL 083.0390	DRALORIC	SMA0207/4750HM-F-D	
R124	RL 0,35W 47,5 OHM+-1%TK50 RESISTOR	RL 082.9507	DRALORIC	SMA0207/47,50HM-F-D	
R125	RS 0,3W 50 OHM+-10%CERMET TRIMMING POTENTIOMETER	RS 006.9122	BECKMAN	67W 500HM 10%	
R126	RL 0,35W 432 OHM+-1%TK50 DEPOS.-CARBON RESISTOR	RL 083.0355	DRALORIC	SMA0207/4320HM-F-D	
R127	RL 0,35W 8,25KOHM+-1%TK50 RESISTOR	RL 083.1239	DRALORIC	SMA0207/8,25K-F-D	
R128	RL 0,35W 562 OHM+-1%TK50 RESISTOR	RL 083.0461	DRALORIC	SMA0207/5620HM-F-D	
R129	RL 0,35W 562 OHM+-1%TK50 RESISTOR	RL 083.0461	DRALORIC	SMA0207/5620HM-F-D	
R130	RL 0,35W22,10 OHM+-1%TK50 RESISTOR	RL 082.9188	DRALORIC	SMA0207/22,10HM-F-D	
R131	RL 0,35W 150 OHM+-1%TK50 RESISTOR	RL 082.9942	DRALORIC	SMA0207/1500HM-F-D	
R133	RL 0,35W 4,75KOHM+-1%TK50 RESISTOR	RL 083.1097	DRALORIC	SMA0207/4,75K-F-D	
R134	RL 0,35W 47,5 OHM+-1%TK50 RESISTOR	RL 082.9507	DRALORIC	SMA0207/47,50HM-F-D	
R135	RL 0,35W 5,62KOHM+-1%TK50 RESISTOR	RL 082.2190	DRALORIC	SMA0207/5,62K-F-C	
R136	RL 0,35W 5,62KOHM+-1%TK50 RESISTOR	RL 082.2190	DRALORIC	SMA0207/5,62K-F-C	
R137	RL 0,35W 475 OHM+-1%TK50 RESISTOR	RL 083.0390	DRALORIC	SMA0207/4750HM-F-D	
R138	RL 0,35W 2,74KOHM+-1%TK50 RESISTOR	RL 083.0926	DRALORIC	SMA0207/2,74K-F-D	
R139	RL 0,35W2,71KOHM+-0,1%T25 RESISTOR	RL 083.9975	DRALORIC	SMA0207/2,71K-B-E	
R150	RL 0,35W 100KOHM+-1%TK50 RESISTOR	RL 082.1764	DRALORIC	SMA0207/100K-F-C	
R151	RL 0,35W 100KOHM+-1%TK50 RESISTOR	RL 082.1764	DRALORIC	SMA0207/100K-F-C	
R152	RL 0,35W 150 OHM+-1%TK50 RESISTOR	RL 082.9942	DRALORIC	SMA0207/1500HM-F-D	
R153	RL 0,35W 475 OHM+-1%TK50 RESISTOR	RL 083.0390	DRALORIC	SMA0207/4750HM-F-D	
R154	RL 0,35W 47,5 OHM+-1%TK50 RESISTOR	RL 082.9507	DRALORIC	SMA0207/47,50HM-F-D	
R155	RS 0,3W 50 OHM+-10%CERMET TRIMMING POTENTIOMETER	RS 006.9122	BECKMAN	67W 500HM 10%	
R156	RL 0,35W 432 OHM+-1%TK50 DEPOS.-CARBON RESISTOR	RL 083.0355	DRALORIC	SMA0207/4320HM-F-D	
R157	RL 0,35W 8,25KOHM+-1%TK50 RESISTOR	RL 083.1239	DRALORIC	SMA0207/8,25K-F-D	
R158	RL 0,35W 562 OHM+-1%TK50 RESISTOR	RL 083.0461	DRALORIC	SMA0207/5620HM-F-D	
R159	RL 0,35W 562 OHM+-1%TK50 RESISTOR	RL 083.0461	DRALORIC	SMA0207/5620HM-F-D	
R160	RL 0,35W22,10 OHM+-1%TK50 RESISTOR	RL 082.9188	DRALORIC	SMA0207/22,10HM-F-D	
R161	RL 0,35W 150 OHM+-1%TK50 RESISTOR	RL 082.9942	DRALORIC	SMA0207/1500HM-F-D	
R163	RL 0,35W 4,75KOHM+-1%TK50 RESISTOR	RL 083.1097	DRALORIC	SMA0207/4,75K-F-D	

Kennz. Comp.No.	Benennung Designation	Sachnummer Stock No.	Hersteller Manufacturer	Bezeichnung Designation	enthalten in contained in
R164	RL 0,35W 47,5 OHM+-1%TK50 RESISTOR	RL 082.9507	DRALORIC	SMA0207/47,5OHM-F-D	
R165	RL 0,35W 5,62KOHM+-1%TK50 RESISTOR	RL 082.2190	DRALORIC	SMA0207/5,62K-F-C	
R166	RL 0,35W 5,62KOHM+-1%TK50 RESISTOR	RL 082.2190	DRALORIC	SMA0207/5,62K-F-C	
R167	RL 0,35W 475 OHM+-1%TK50 RESISTOR	RL 083.0390	DRALORIC	SMA0207/475OHM-F-D	
R168	RL 0,35W 2,74KOHM+-1%TK50 RESISTOR	RL 083.0926	DRALORIC	SMA0207/2,74K-F-D	
R169	RL 0,35W2,71KOHM+-0,1%T25 RESISTOR	RL 083.9975	DRALORIC	SMA0207/2,71K-B-E	
R180	RL 0,35W 100KOHM+-1%TK50 RESISTOR	RL 082.1764	DRALORIC	SMA0207/100K-F-C	
R181	RL 0,35W 10,0 OHM+-1%TK50 RESISTOR	RL 082.8852	DRALORIC	SMA0207/10OHM-F-D	
R182	RL 0,35W 274 OHM+-1%TK50 RESISTOR	RL 083.0178	DRALORIC	SMA0207/274OHM-F-D	
R183	RL 0,35W 1,50KOHM+-1%TK50 RESISTOR	RL 083.0732	DRALORIC	SMA0207/1,50K-F-D	
R184	RL 0,35W 432 OHM+-1%TK50 DEPOS.-CARBON RESISTOR	RL 083.0355	DRALORIC	SMA0207/432OHM-F-D	
R185	RL 0,35W 5,62KOHM+-1%TK50 RESISTOR	RL 082.2190	DRALORIC	SMA0207/5,62K-F-C	
R186	RL 0,35W 12,1KOHM+-1%TK50 RESISTOR	RL 083.1351	DRALORIC	SMA0207/12,1K-F-D	
R187	RL 0,35W 10,0 OHM+-1%TK50 RESISTOR	RL 082.8852	DRALORIC	SMA0207/10OHM-F-D	
R188	RL 0,35W 681 OHM+-1%TK50 RESISTOR	RL 083.0490	DRALORIC	SMA0207/681OHM-F-D	
R189	RL 0,35W22,10 OHM+-1%TK50 RESISTOR	RL 082.9188	DRALORIC	SMA0207/22,1OHM-F-D	
R190	RS 0,3W 50 OHM+-10%CERMET TRIMMING POTENTIOMETER	RS 006.9122	BECKMAN	67W 500HM 10%	
R200	RL 0,35W 1KOHM+-1%TK50 RESISTOR	RL 082.2160	DRALORIC	SMA0207/1K-F-C	
R201	RL 0,35W 150 OHM+-1%TK50 RESISTOR	RL 082.9942	DRALORIC	SMA0207/150OHM-F-D	
R202	RL 0,35W 2,74KOHM+-1%TK50 RESISTOR	RL 083.0926	DRALORIC	SMA0207/2,74K-F-D	
R203	RL 0,35W 2,21KOHM+-1%TK50 RESISTOR	RL 082.2477	DRALORIC	SMA 0207/2,21K-F-C	
R204	RL 0,35W 1,82KOHM+-1%TK50 RESISTOR	RL 082.2277	DRALORIC	SMA0207/1,82K-F-C	
R205	RL 0,35W 150 OHM+-1%TK50 RESISTOR	RL 082.9942	DRALORIC	SMA0207/150OHM-F-D	
R206	RL 0,35W 56,2 OHM+-1%TK50 RESISTOR	RL 082.9571	DRALORIC	SMA0207/56,2OHM-F-D	
R207	RL 0,35W 562 OHM+-1%TK50 RESISTOR	RL 083.0461	DRALORIC	SMA0207/562OHM-F-D	
R208	RL 0,35W 56,2 OHM+-1%TK50 RESISTOR	RL 082.9571	DRALORIC	SMA0207/56,2OHM-F-D	
R209	RL 0,35W 47,5 OHM+-1%TK50 RESISTOR	RL 082.9507	DRALORIC	SMA0207/47,5OHM-F-D	
R210	RL 0,35W 47,5 OHM+-1%TK50 RESISTOR	RL 082.9507	DRALORIC	SMA0207/47,5OHM-F-D	
R211	RL 0,35W 4,75KOHM+-1%TK50 RESISTOR	RL 083.1097	DRALORIC	SMA0207/4,75K-F-D	
R213	RL 0,35W 2,74KOHM+-1%TK50 RESISTOR	RL 083.0926	DRALORIC	SMA0207/2,74K-F-D	
R220	RL 0,35W 51,1 OHM+-1%TK50 RESISTOR	RL 082.9536	DRALORIC	SMA0207/51,1OHM-F-D	
R221	RL 0,35W 4,75KOHM+-1%TK50 RESISTOR	RL 083.1097	DRALORIC	SMA0207/4,75K-F-D	
R222	RL 0,35W 8,25KOHM+-1%TK50 RESISTOR	RL 083.1239	DRALORIC	SMA0207/8,25K-F-D	
R223	RL 0,35W 274 OHM+-1%TK50 RESISTOR	RL 083.0178	DRALORIC	SMA0207/274OHM-F-D	
R224	RL 0,35W 301 OHM+-1%TK50 RESISTOR	RL 083.0210	DRALORIC	SMA0207/301OHM-F-D	
R225	RL 0,35W 332 OHM+-1%TK50 RESISTOR	RL 083.0255	DRALORIC	SMA0207/332OHM-F-D	
R226	RL 0,35W 2,74KOHM+-1%TK50 RESISTOR	RL 083.0926	DRALORIC	SMA0207/2,74K-F-D	
R227	RL 0,35W 2,74KOHM+-1%TK50 RESISTOR	RL 083.0926	DRALORIC	SMA0207/2,74K-F-D	
R228	RL 0,35W 2,74KOHM+-1%TK50 RESISTOR	RL 083.0926	DRALORIC	SMA0207/2,74K-F-D	

Kennz. Comp.No.	Benennung Designation	Sachnummer Stock No.	Hersteller Manufacturer	Bezeichnung Designation	enthalten in contained in
R230	RL 0,35W 10,0KOHM+-1%TK50 RESISTOR	RL 083.1297	DRALORIC	SMA0207/10K-F-D	
R231	RL 0,35W 4,75KOHM+-1%TK50 RESISTOR	RL 083.1097	DRALORIC	SMA0207/4,75K-F-D	
R232	RL 0,35W 562 OHM+-1%TK50 RESISTOR	RL 083.0461	DRALORIC	SMA0207/562OHM-F-D	
R233	RL 0,35W 1,50KOHM+-1%TK50 RESISTOR	RL 083.0732	DRALORIC	SMA0207/1,50K-F-D	
R234	RL 0,35W 100KOHM+-1%TK50 RESISTOR	RL 082.1764	DRALORIC	SMA0207/100K-F-C	
R235	RL 0,35W 100KOHM+-1%TK50 RESISTOR	RL 082.1764	DRALORIC	SMA0207/100K-F-C	
R236	RL 0,35W 8,25KOHM+-1%TK50 RESISTOR	RL 083.1239	DRALORIC	SMA0207/8,25K-F-D	
R237	RL 0,35W 4,75KOHM+-1%TK50 RESISTOR	RL 083.1097	DRALORIC	SMA0207/4,75K-F-D	
R238	RL 0,35W 475 OHM+-1%TK50 RESISTOR	RL 083.0390	DRALORIC	SMA0207/475OHM-F-D	
R239	RL 0,35W 68,1 OHM+-1%TK50 RESISTOR	RL 082.9636	DRALORIC	SMA0207/68,1OHM-F-D	
R240	RL 0,35W 100 OHM+-1%TK50 METALFILM-RESISTOR	RL 082.6543	DRALORIC	SMA0207/100/HM-F-D	
R242	RL 0,35W 200 OHM+-1%TK50 RESISTOR	RL 083.0049	DRALORIC	SMA0207/200OHM-F-D	
R243	RL 0,35W 100 OHM+-1%TK50 METALFILM-RESISTOR	RL 082.6543	DRALORIC	SMA0207/100/HM-F-D	
R250	RL 0,35W 150 OHM+-1%TK50 RESISTOR	RL 082.9942	DRALORIC	SMA0207/150OHM-F-D	
R251	RL 0,35W 150 OHM+-1%TK50 RESISTOR	RL 082.9942	DRALORIC	SMA0207/150OHM-F-D	
R252	RL 0,35W 150 OHM+-1%TK50 RESISTOR	RL 082.9942	DRALORIC	SMA0207/150OHM-F-D	
R253	RL 0,35W 1KOHM+-1%TK50 RESISTOR	RL 082.2160	DRALORIC	SMA0207/1K-F-C	
R254	RL 0,35W 150 OHM+-1%TK50 RESISTOR	RL 082.9942	DRALORIC	SMA0207/150OHM-F-D	
R255	RL 0,35W 5,62KOHM+-1%TK50 RESISTOR	RL 082.2190	DRALORIC	SMA0207/5,62K-F-C	
R256	RL 0,35W 5,62KOHM+-1%TK50 RESISTOR	RL 082.2190	DRALORIC	SMA0207/5,62K-F-C	
R257	RL 0,35W 5,62KOHM+-1%TK50 RESISTOR	RL 082.2190	DRALORIC	SMA0207/5,62K-F-C	
R258	RL 0,35W 5,62KOHM+-1%TK50 RESISTOR	RL 082.2190	DRALORIC	SMA0207/5,62K-F-C	
R259	RL 0,35W 39,2KOHM+-1%TK50 RESISTOR	RL 083.1745	DRALORIC	SMA/207/39,2K-F-C	
R260	RL 0,35W 5,62KOHM+-1%TK50 RESISTOR	RL 082:2190	DRALORIC	SMA0207/5,62K-F-C	
R261	RL 0,35W 5,62KOHM+-1%TK50 RESISTOR	RL 082.2190	DRALORIC	SMA0207/5,62K-F-C	
R262	RL 0,35W 10,0KOHM+-1%TK50 RESISTOR	RL 083.1297	DRALORIC	SMA0207/10K-F-D	
R263	RL 0,35W 22,1KOHM+-1%TK50 RESISTOR	RL 083.1545	DRALORIC	SMA/207/22,1K-F-C	
R264	RL 0,35W 22,1KOHM+-1%TK50 RESISTOR	RL 083.1545	DRALORIC	SMA/207/22,1K-F-C	
R265	RL 0,35W 5,62KOHM+-1%TK50 RESISTOR	RL 082.2190	DRALORIC	SMA0207/5,62K-F-C	
R266	RL 0,35W 5,62KOHM+-1%TK50 RESISTOR	RL 082.2190	DRALORIC	SMA0207/5,62K-F-C	
R267	RL 0,35W 6,81KOHM+-1%TK50 RESISTOR	RL 082.2560	DRALORIC	SMA 0207/6,81K-F-C	
R268	RL 0,35W 15,0KOHM+-1%TK50 RESISTOR	RL 083.1400	DRALORIC	SMA0207/15K-F-D	
R269	RL 0,35W 22,1KOHM+-1%TK50 RESISTOR	RL 083.1545	DRALORIC	SMA/207/22,1K-F-C	
R270	RL 0,35W 68,1KOHM+-1%TK50 RESISTOR	RL 082.2602	DRALORIC	SMA 0207/68,1K-F-C	
R271	RL 0,35W 162KOHM+-1%TK50 RESISTOR	RL 082.2154	DRALORIC	SMA0207/162K-F-C	
R272	RL 0,35W 432 KOHM+-1%TK50 RESISTOR	RL 083.2558	DRALORIC	SMA0207/432K-F-C	
R273	RL 0,35W 8,25KOHM+-1%TK50 RESISTOR	RL 083.1239	DRALORIC	SMA0207/8,25K-F-D	
R274	RL 0,35W 20,0KOHM+-1%TK50 RESISTOR	RL 083.1522	DRALORIC	SMA/207/20K-F-C	
R275	RL 0,35W 39,2KOHM+-1%TK50 RESISTOR	RL 083.1745	DRALORIC	SMA/207/39,2K-F-C	

Kennz. Comp.No.	Benennung Designation	Sachnummer Stock No.	Hersteller Manufacturer	Bezeichnung Designation	enthalten in contained in
R276	RL 0,35W 182 KOHM+-1%TK50 RESISTOR	RL 083.2193	DRALORIC	SMA0207/182K-F-C	
R277	RL 0,35W 1MOHM+-1%TK50 RESISTOR	RL 082.7862	DRALORIC	SMA0207/1M-F-D	
R278	RS 0,5W 50KOHM+-20%KURVE1 DEPOS.-CARBON POTENTIOMET	RS 069.0451	BOURNS	3329H-1-503	
R279	RL 0,35W4,75MOHM+-1%TK50 METALFILMRESISTOR	RL 099.8250	RESISTA	MK2 4,75MOHM 1% TK50	
R280	RL 0,35W 18,2KOHM+-1%TK50 RESISTOR	RL 083.1480	DRALORIC	SMA/207/18,2K-F-C	
R281	RL 0,35W 8,25KOHM+-1%TK50 RESISTOR	RL 083.1239	DRALORIC	SMA0207/8,25K-F-D	
R282	RL 0,35W 68,1KOHM+-1%TK50 RESISTOR	RL 082.2602	DRALORIC	SMA 0207/68,1K-F-C	
R285	RL 0,35W 68,1 OHM+-1%TK50 RESISTOR	RL 082.9636	DRALORIC	SMA0207/68,1OHM-F-D	
R287	RS 0,5W 2KOHM+-20%KURVE1 DEPOS.-CARBON POTENTIOMET	RS 069.8046	BOURNS	3329H-1-202	
R288	RL 0,35W 10,0KOHM+-1%TK50 RESISTOR	RL 083.1297	DRALORIC	SMA0207/10K-F-D	
R289	RL 0,35W 22,1KOHM+-1%TK50 RESISTOR	RL 083.1545	DRALORIC	SMA/207/22,1K-F-C	
R290	RL 0,35W 475 OHM+-1%TK50 RESISTOR	RL 083.0390	DRALORIC	SMA0207/475OHM-F-D	
R291	RL 0,35W 5,62KOHM+-1%TK50 RESISTOR	RL 082.2190	DRALORIC	SMA0207/5,62K-F-C	
R292	RL 0,35W 221 OHM+-1%TK50 RESISTOR	RL 083.0084	DRALORIC	SMA0207/221OHM-F-D	
R293	RL 0,35W 1MOHM+-1%TK50 RESISTOR	RL 082.7862	DRALORIC	SMA0207/1M-F-D	
R294	RL 0,35W 511 KOHM+-1%TK50 RESISTOR	RL 083.2629	DRALORIC	SMA0207/511K-F-C	
R295	RL 0,35W 10,0KOHM+-1%TK50 RESISTOR	RL 083.1297	DRALORIC	SMA0207/10K-F-D	
R296	RL 0,35W 1KOHM+-1%TK50 RESISTOR	RL 082.2160	DRALORIC	SMA0207/1K-F-C	
R300 ..304	RL 0,35W 10,0KOHM+-1%TK50 RESISTOR	RL 083.1297	DRALORIC	SMA0207/10K-F-D	
R306 ..312	RL 0,35W 10,0KOHM+-1%TK50 RESISTOR	RL 083.1297	DRALORIC	SMA0207/10K-F-D	
R396	RL 0,35W 100KOHM+-1%TK50 RESISTOR	RL 082.1764	DRALORIC	SMA0207/100K-F-C	
R397	RL 0,35W 121 OHM+-1%TK50 RESISTOR	RL 082.9859	DRALORIC	SMA0207/121OHM-F-D	
R399	RL 0,35W 2,74KOHM+-1%TK50 RESISTOR	RL 083.0926	DRALORIC	SMA0207/2,74K-F-D	
R400	RL 0,35W 681 OHM+-1%TK50 RESISTOR	RL 083.0490	DRALORIC	SMA0207/681OHM-F-D	
T1	LU TRAFO	805.4360			
T2	LU TRAFO	805.4360			
T3	LU TRAFO	805.4360			
T4	LU TRAFO	805.4376			
T5	LU TRAFO	805.4376			
T6	LU UEBERTRAGER	805.5450			
T8	LU UEBERTRAGER TRANSFORMER	807.4067			
V1	AE BA244 BER.SCH.DI.UHF DIODE	AE 439.6310	INTERMETAL	BA244	
V2	AE BA244 BER.SCH.DI.UHF DIODE	AE 439.6310	INTERMETAL	BA244	
V3	AE BA244 BER.SCH.DI.UHF DIODE	AE 439.6310	INTERMETAL	BA244	
V5	AE BA244 BER.SCH.DI.UHF DIODE	AE 439.6310	INTERMETAL	BA244	
V8	AK 2N5109 N 20V 400MA TRANSISTOR	AK 010.0761	MOTOROLA	2N5109	
V9	AK 2N5109 N 20V 400MA TRANSISTOR	AK 010.0761	MOTOROLA	2N5109	
V11	AE BZX79/C4V7 0,5W ZDI ZENER DIODE	AE 012.2432	AEG	BZX55/C4V7 GEG.	
V30	AK 2N2369A N 15V 200MA TRANSISTOR	AK 010.4680	VALVO	2N2369A	
V31	AK 2N2369A N 15V 200MA TRANSISTOR	AK 010.4680	VALVO	2N2369A	
V32	AK BFX48 P 30V 100MA TRANSISTOR	AK 010.3202	SGS	BFX48	

Kennz. Comp.No.	Benennung Designation	Sachnummer Stock No.	Hersteller Manufacturer	Bezeichnung Designation	enthalten in contained in
V33	AK BFX48 P 30V 100MA TRANSISTOR	AK 010.3202	SGS	BFX48	
V34	AE QPND4154 50V PIN PINDIODE	805.5395	HEWLETT-P.	QPND4154	
V60	AM J310 N-D 25V JFET FET	283.9031	SILICONIX	J310	
V61	AK BCY79IX P 45V 200MA TRANSISTOR	AK 010.3777	VALVO	BCY79IX	
V62	AK BCY59IX N 45V 200MA TRANSISTOR	AK 010.5163	VALVO	BCY59IX	
V63	AK BFX48 P 30V 100MA TRANSISTOR	AK 010.3202	SGS	BFX48	
V64	AE QPND4154 50V PIN PINDIODE	805.5395	HEWLETT-P.	QPND4154	
V90	AM J310 N-D 25V JFET FET	283.9031	SILICONIX	J310	
V91	AK BCY79IX P 45V 200MA TRANSISTOR	AK 010.3777	VALVO	BCY79IX	
V92	AK BCY59IX N 45V 200MA TRANSISTOR	AK 010.5163	VALVO	BCY59IX	
V93	AK BFX48 P 30V 100MA TRANSISTOR	AK 010.3202	SGS	BFX48	
V94	AE QPND4154 50V PIN PINDIODE	805.5395	HEWLETT-P.	QPND4154	
V120	AM J310 N-D 25V JFET FET	283.9031	SILICONIX	J310	
V121	AK BCY79IX P 45V 200MA TRANSISTOR	AK 010.3777	VALVO	BCY79IX	
V122	AK BCY59IX N 45V 200MA TRANSISTOR	AK 010.5163	VALVO	BCY59IX	
V123	AK BFX48 P 30V 100MA TRANSISTOR	AK 010.3202	SGS	BFX48	
V124	AE QPND4154 50V PIN PINDIODE	805.5395	HEWLETT-P.	QPND4154	
V150	AM J310 N-D 25V JFET FET	283.9031	SILICONIX	J310	
V151	AK BCY79IX P 45V 200MA TRANSISTOR	AK 010.3777	VALVO	BCY79IX	
V152	AK BCY59IX N 45V 200MA TRANSISTOR	AK 010.5163	VALVO	BCY59IX	
V153	AK BFX48 P 30V 100MA TRANSISTOR	AK 010.3202	SGS	BFX48	
V154	AE QPND4154 50V PIN PINDIODE	805.5395	HEWLETT-P.	QPND4154	
V180	AM J310 N-D 25V JFET FET	283.9031	SILICONIX	J310	
V181	AK BFX48 P 30V 100MA TRANSISTOR	AK 010.3202	SGS	BFX48	
V182	AK BF374 N 25V 100MA TRANSISTOR	377.3859	MOTOROLA	BF374	
V200	AK BFW16A N 40V 150MA TRANSISTOR	AK 010.4644	VALVO	BFW16A	
V203	AE BA244 BER.SCH.DI.UHF DIODE	AE 439.6310	INTERMETAL	BA244	
V205	AE BZX79/C4V7 0,5W ZDI ZENER DIODE	AE 012.2432	AEG	BZX55/C4V7 GEG.	
V220	AK BFX48 P 30V 100MA TRANSISTOR	AK 010.3202	SGS	BFX48	
V221	AE BA244 BER.SCH.DI.UHF DIODE	AE 439.6310	INTERMETAL	BA244	
V222	AE BA244 BER.SCH.DI.UHF DIODE	AE 439.6310	INTERMETAL	BA244	
V223	AE BA244 BER.SCH.DI.UHF DIODE	AE 439.6310	INTERMETAL	BA244	
V224	AK 2N2369A N 15V 200MA TRANSISTOR	AK 010.4680	VALVO	2N2369A	
V230	AK BC550B N 50V 100MA TRANSISTOR	AK 007.2050	SIEMENS	BC550B GURT,POL.CBE	
V231	AK 2N2369A N 15V 200MA TRANSISTOR	AK 010.4680	VALVO	2N2369A	
V232	AE BB809 26/ 6PF CDI TUNING DIODE	AE 092.9616	VALVO	BB809	
V233	AE BB809 26/ 6PF CDI TUNING DIODE	AE 092.9616	VALVO	BB809	
V250 ..254	AD 1N4448 75V 0A15 UDI DIODE	AD 012.0700	TEXAS INST	1N4448 GEGURTET	
V256	AD 1N4448 75V 0A15 UDI DIODE	AD 012.0700	TEXAS INST	1N4448 GEGURTET	

...uns alle Rechte vor

Kennz. Comp.No.	Benennung Designation	Sachnummer Stock No.	Hersteller Manufacturer	Bezeichnung Designation	enthalten in contained in
V257	AE 1N827 6,2V REFDI REFERENCE DIODE	AE 418.0029	CDI	1N827	
V260	AK BC550B N 50V 100MA TRANSISTOR	AK 007.2050	SIEMENS	BC550B GURT,POL.CBE	
V261	AK BC337-40 N 45V 800MA TRANSISTOR	AK 815.7684	VALVO	BC337-40GEGURTET	
V262	AK BC337-40 N 45V 800MA TRANSISTOR	AK 815.7684	VALVO	BC337-40GEGURTET	
W1	DX HF-KABEL (W1)	805.5072			
W1	DH 500HM96PF/M RD1,2PTFE CABLE	DH 458.7053	SUHNER	VOLLMANTELKABELSR1	805.5072
X2	FJ EINBAUWINKELST. SMC ANGLE CONNECTOR	FJ 249.9684	RADIALL	R 112 669	
X8	FJ EINBAUWINKELST. SMC ANGLE CONNECTOR	FJ 249.9684	RADIALL	R 112 669	
X11	FP INDIREKT.STECKERL.36P. PIN CONNECTOR 2-POLIG	FP 242.3600	BINDER	742-5-11-0178-00-36	
X12	FP INDIREKT.STECKERL.36P. PIN CONNECTOR 2-POLIG	FP 242.3600	BINDER	742-5-11-0178-00-36	
X21	FP IND.STECKERLEISTE 64 P MALE MULTIPOINT CONNECTOR	FP 273.0490	PANDUIT	100-964-033/999	
X30	FP INDIREKT.STECKERL.36P. PIN CONNECTOR 4-POLIG	FP 242.3600	BINDER	742-5-11-0178-00-36	
X31	FP KURZSCHLUSSBUCHSE SHORTING PLUG	FP 491.7042	PK	452-70302	
X33	FP INDIREKT.STECKERL.36P. PIN CONNECTOR 2-POLIG	FP 242.3600	BINDER	742-5-11-0178-00-36	
X34	FP INDIREKT.STECKERL.36P. PIN CONNECTOR 2-POLIG	FP 242.3600	BINDER	742-5-11-0178-00-36	
X35	FP INDIREKT.STECKERL.36P. PIN CONNECTOR 6-POLIG	FP 242.3600	BINDER	742-5-11-0178-00-36	
X36	FP KURZSCHLUSSBUCHSE SHORTING PLUG	FP 491.7042	PK	452-70302	
X60	FP INDIREKT.STECKERL.36P. PIN CONNECTOR 2-POLIG	FP 242.3600	BINDER	742-5-11-0178-00-36	
X61	FP INDIREKT.STECKERL.36P. PIN CONNECTOR 2-POLIG	FP 242.3600	BINDER	742-5-11-0178-00-36	
X62	FP INDIREKT.STECKERL.36P. PIN CONNECTOR 6-POLIG	FP 242.3600	BINDER	742-5-11-0178-00-36	
X63	FP KURZSCHLUSSBUCHSE SHORTING PLUG	FP 491.7042	PK	452-70302	
X64	FP INDIREKT.STECKERL.36P. PIN CONNECTOR 2-POLIG	FP 242.3600	BINDER	742-5-11-0178-00-36	
X65	FP KURZSCHLUSSBUCHSE SHORTING PLUG	FP 491.7042	PK	452-70302	
X90	FP INDIREKT.STECKERL.36P. PIN CONNECTOR 2-POLIG	FP 242.3600	BINDER	742-5-11-0178-00-36	
X91	FP INDIREKT.STECKERL.36P. PIN CONNECTOR 2-POLIG	FP 242.3600	BINDER	742-5-11-0178-00-36	
X92	FP INDIREKT.STECKERL.36P. PIN CONNECTOR 6-POLIG	FP 242.3600	BINDER	742-5-11-0178-00-36	
X93	FP KURZSCHLUSSBUCHSE SHORTING PLUG	FP 491.7042	PK	452-70302	
X94	FP INDIREKT.STECKERL.36P. PIN CONNECTOR 2-POLIG	FP 242.3600	BINDER	742-5-11-0178-00-36	
X95	FP KURZSCHLUSSBUCHSE SHORTING PLUG	FP 491.7042	PK	452-70302	
X120	FP INDIREKT.STECKERL.36P. PIN CONNECTOR 2-POLIG	FP 242.3600	BINDER	742-5-11-0178-00-36	
X121	FP INDIREKT.STECKERL.36P. PIN CONNECTOR	FP 242.3600	BINDER	742-5-11-0178-00-36	

Für diese Unterlage behalten wir uns alle Rechte vor

Kennz. Comp.No.	Benennung Designation	Sachnummer Stock No.	Hersteller Manufacturer	Bezeichnung Designation	enthalten in contained in
	2-POLIG				
X122	FP INDIREKT.STECKERL.36P. PIN CONNECTOR 6-POLIG	FP 242.3600	BINDER	742-5-11-0178-00-36	
X123	FP KURZSCHLUSSBUCHSE SHORTING PLUG	FP 491.7042	PK	452-70302	
X124	FP INDIREKT.STECKERL.36P. PIN CONNECTOR 2-POLIG	FP 242.3600	BINDER	742-5-11-0178-00-36	
X125	FP KURZSCHLUSSBUCHSE SHORTING PLUG	FP 491.7042	PK	452-70302	
X150	FP INDIREKT.STECKERL.36P. PIN CONNECTOR 2-POLIG	FP 242.3600	BINDER	742-5-11-0178-00-36	
X151	FP INDIREKT.STECKERL.36P. PIN CONNECTOR 2-POLIG	FP 242.3600	BINDER	742-5-11-0178-00-36	
X152	FP INDIREKT.STECKERL.36P. PIN CONNECTOR 6-POLIG	FP 242.3600	BINDER	742-5-11-0178-00-36	
X153	FP KURZSCHLUSSBUCHSE SHORTING PLUG	FP 491.7042	PK	452-70302	
X154	FP INDIREKT.STECKERL.36P. PIN CONNECTOR 2-POLIG	FP 242.3600	BINDER	742-5-11-0178-00-36	
X155	FP KURZSCHLUSSBUCHSE SHORTING PLUG	FP 491.7042	PK	452-70302	
X180	FP INDIREKT.STECKERL.36P. PIN CONNECTOR 2-POLIG	FP 242.3600	BINDER	742-5-11-0178-00-36	
X181	FP INDIREKT.STECKERL.36P. PIN CONNECTOR 4-POLIG	FP 242.3600	BINDER	742-5-11-0178-00-36	
X182	FP KURZSCHLUSSBUCHSE SHORTING PLUG	FP 491.7042	PK	452-70302	
X200	FP INDIREKT.STECKERL.36P. PIN CONNECTOR 2-POLIG	FP 242.3600	BINDER	742-5-11-0178-00-36	
X230	FP INDIREKT.STECKERL.36P. PIN CONNECTOR 4-POLIG	FP 242.3600	BINDER	742-5-11-0178-00-36	
X231	FP KURZSCHLUSSBUCHSE SHORTING PLUG	FP 491.7042	PK	452-70302	
X50A	FP INDIREKT.STECKERL.36P. PIN CONNECTOR 8-POLIG	FP 242.3600	BINDER	742-5-11-0178-00-36	
X50B	FP INDIREKT.STECKERL.36P. PIN CONNECTOR 8-POLIG	FP 242.3600	BINDER	742-5-11-0178-00-36	
					- ENDE -

Für diese Unterlage behalten wir uns alle Rechte vor

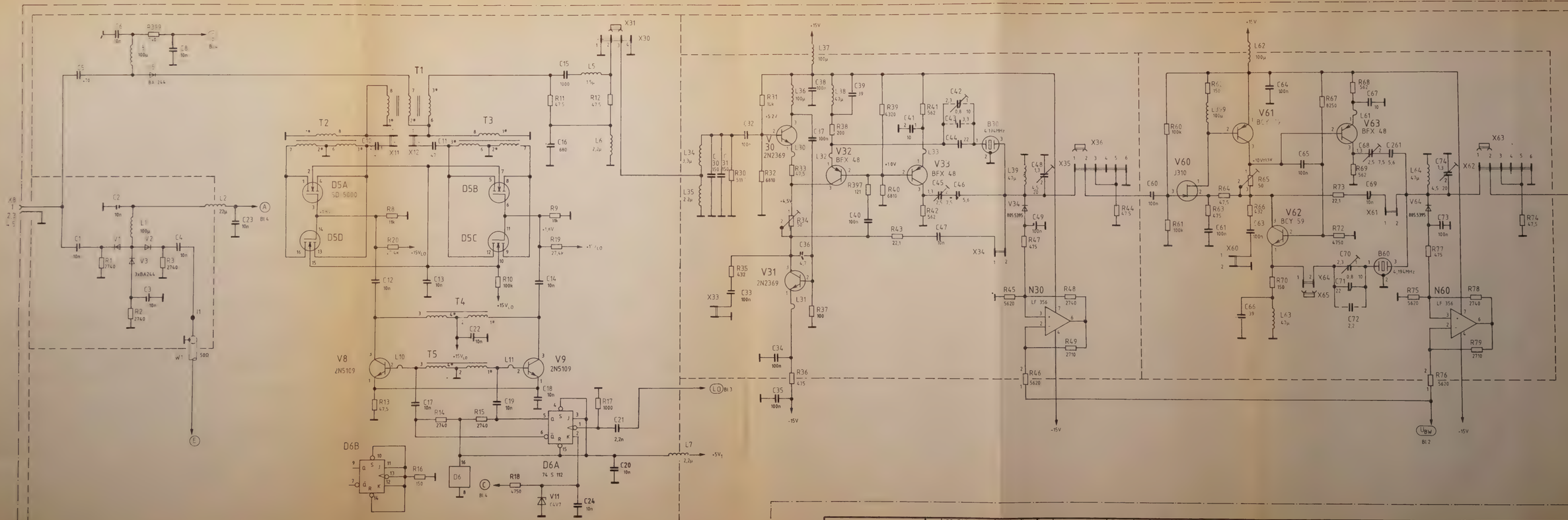

A	32 744 (12)	03.86	GN	E	———	05.87	Gn	1KGF	Tag	Name	Benennung	IF-FILTER 2	Zeichn.-Nr. 805. 4318 S
B	32 744 (42)	08.86	GN	H	32765	10.87	PA	Bearb.	10.85	GN			Blatt Nr. 1
C	32 744 (55)	01.87	GN					Gepr.					4
Änd. Kost	Änderungs-Mitteilung	Datum	Name	Zust. Kost	Änderungs-Mitteilung	Datum	Name	Norm			zu Gerät FSA		reg. i. V. 804. 9516 V erste Z. 804. 9516

ROHDE&SCHWARZ

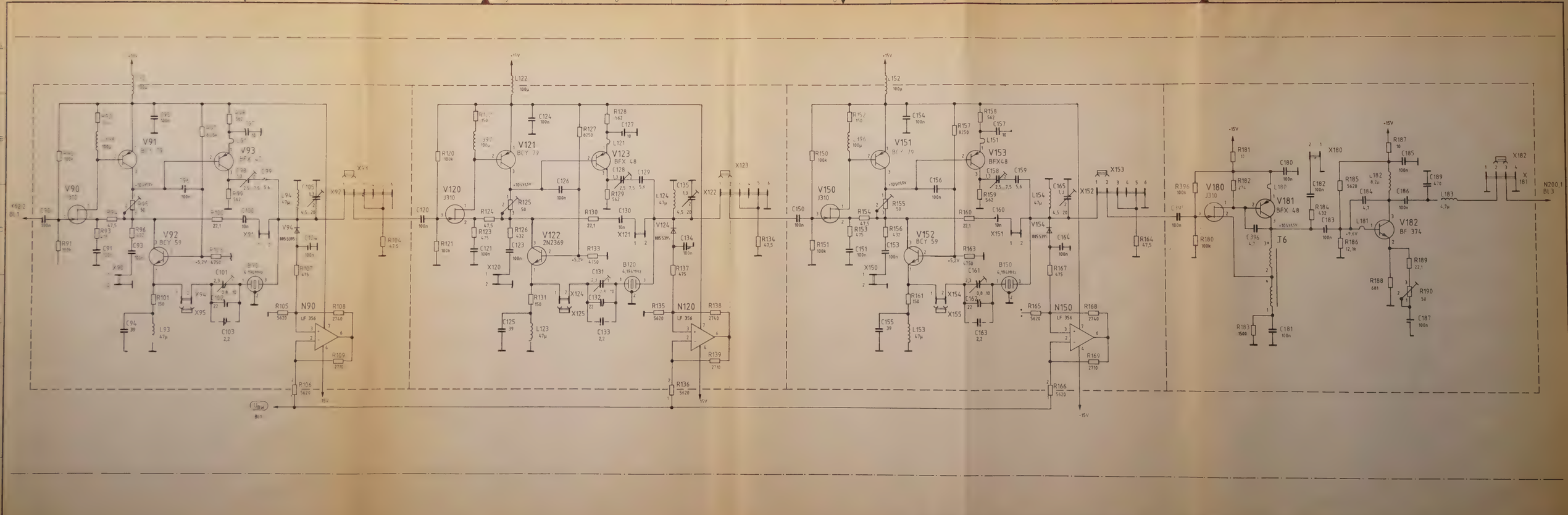

ROHDE&SCHWARZ	A	32 744 (12)	03.86	GN	H	32765	10.87	PA	1KGF	Tag	Name	Benennung	IF-FILTER 2	Zeichn. Nr. 805. 4318 S
	B	32 744 (42)	08.86	GN					Bearb.	10.85	GN			Blatt Nr. 2
	C	32 744 (55)	01.87	GN					Gepr.					v. 4
	Ant.	Änderung	Datum	Name	Ant.	Änderung	Datum	Name	Norm			zu Gerät FSA		reg.-V. 804. 9516 V erste Z. 804. 9516

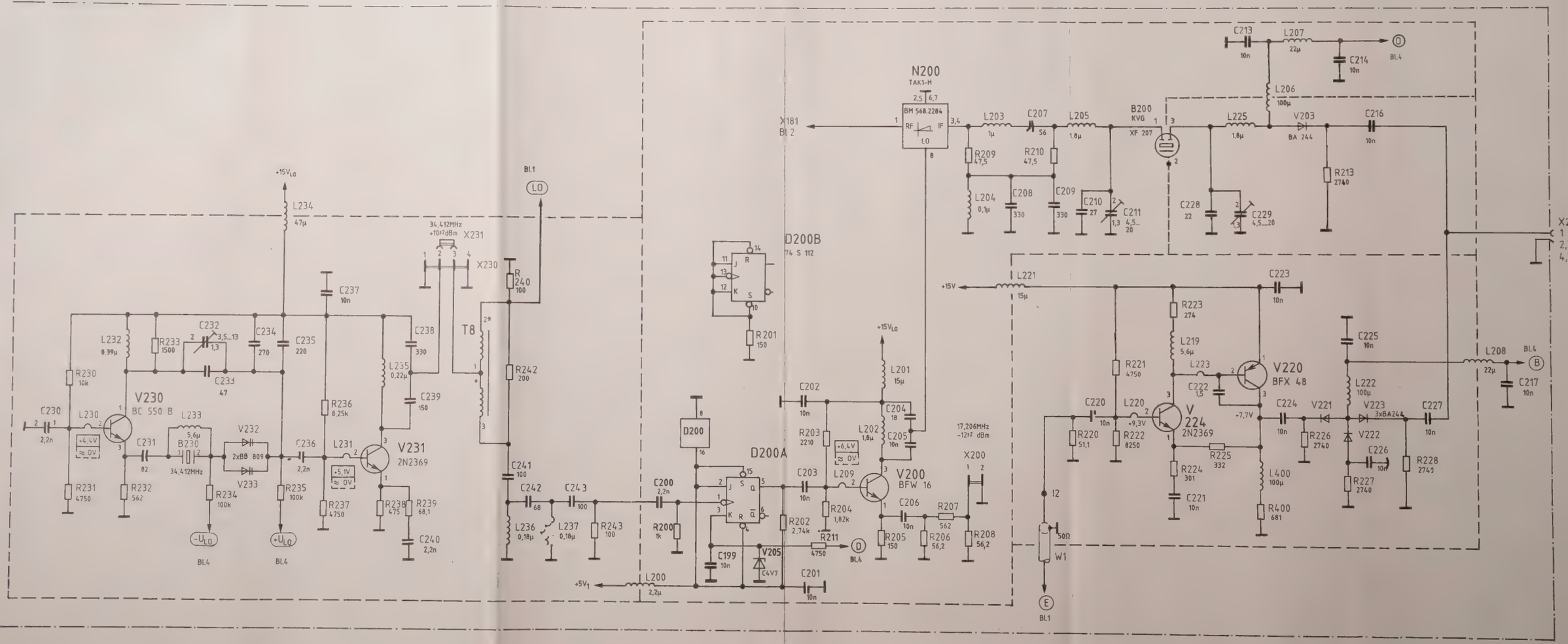

ROHDE&SCHWARZ	H	32765	10.87	PA	E	32 744 (101)	05.87	Gn	1KGF	10.85	GN
	I	37 062	01.88	Pa	F	32 744 (104)	07.87	Gn			
					G	32 765 ( )	09.87	Gn			

Änderungs Mitteilung

Benennung: IF-FILTER 2

Zeichn. Nr.: 805. 4318 S

Blatt Nr. 3 / 4 Bl.

FSA

804. 9516 V

804 9516

Zeichn.-Nr. 805 4318 S Bl.3

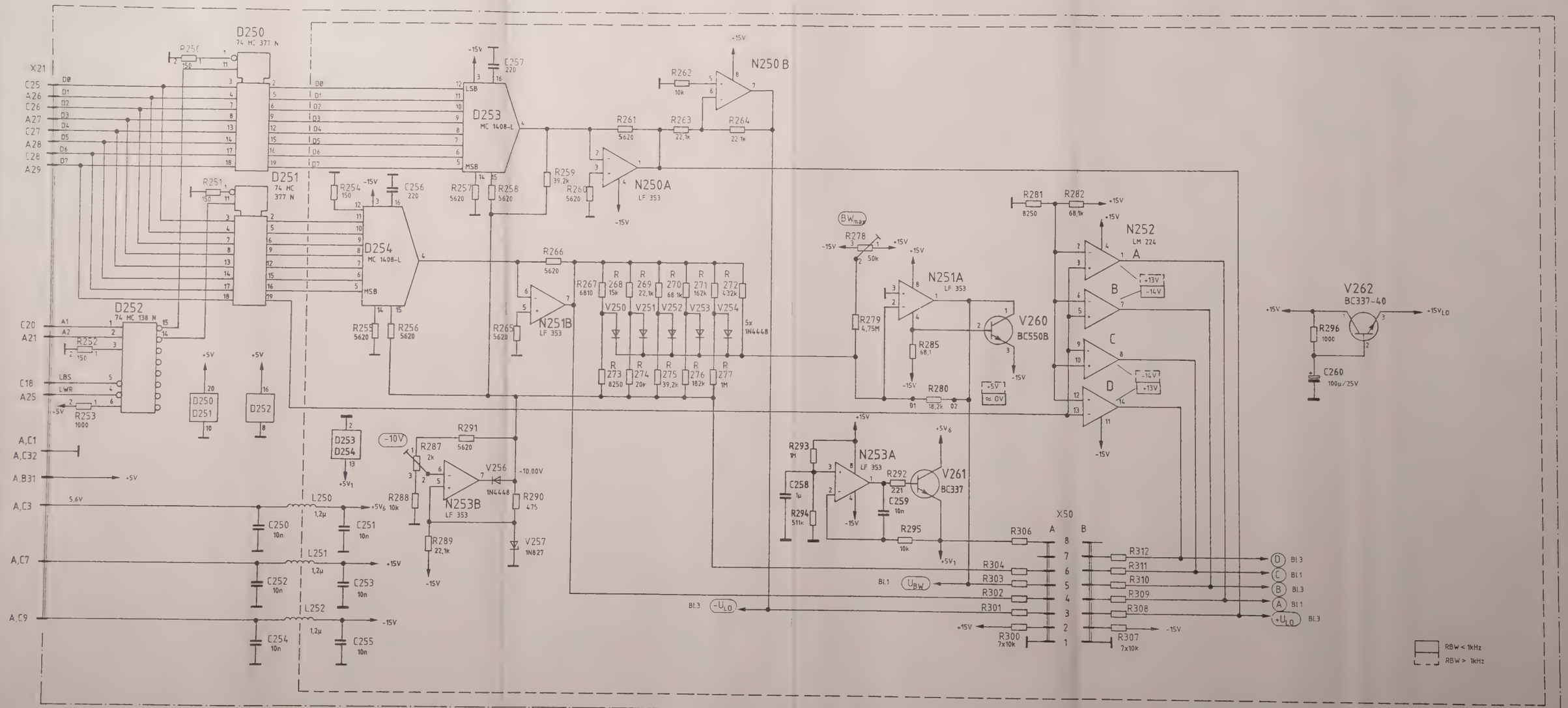

A	32 744 (12)	03.86	H.W.	H	32765	10.87	PA	1KGF	Tag	Name	Benennung: IF-FILTER 2
B	32 744 (42)	08.86	GN	K	37 062 (24)	10.88	Gn	Bearb	10.85	GN	
D	32 744 (92)	05.87	GN					Gepr			
Änd. Zust.	Änderungs-Mitteilung	Datum	Name	Änd. Zust.	Änderungs-Mitteilung	Datum	Name	Norm			

ROHDE & SCHWARZ

805. 4318 S

FSA

804 9516 V

804 9516

Für diese Unterlage behalten wir uns alle Rechte vor

Zeichn. Nr. 805 4318 S Bl 4

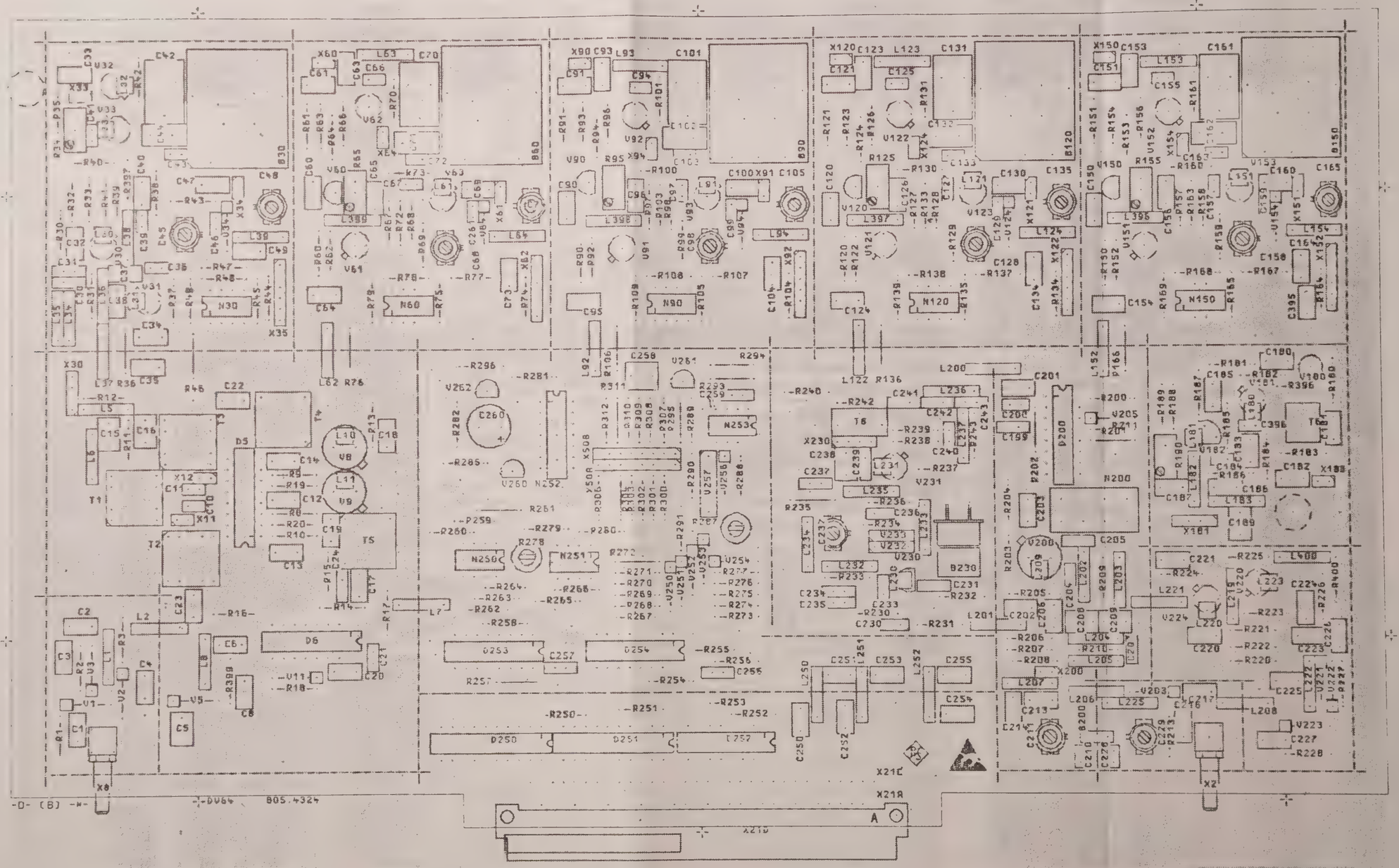

Ansicht und Leitungsführung Bauteilseite
view of tracks on component side

≈ auftrennen

ACHTUNG EGB
Elektrostatisch gefährdete Bauelemente erfordern eine besondere Handhabung
ATTENTION ESD
Electrostatic sensitive devices require special handling

VARIANTENERKLÄRUNG/VERSION
VAR 02 – GRUNDAUSFÜHRUNG/BASIC MODEL

I	32765	11.87	GN
M	37 062 (24)	10.88	Gn

1 : 1

1KGF
11.87 GN

IF - FILTER 2

Z

ROHDE & SCHWARZ

805.4318.01 EE

2

FSA

804 8010 V

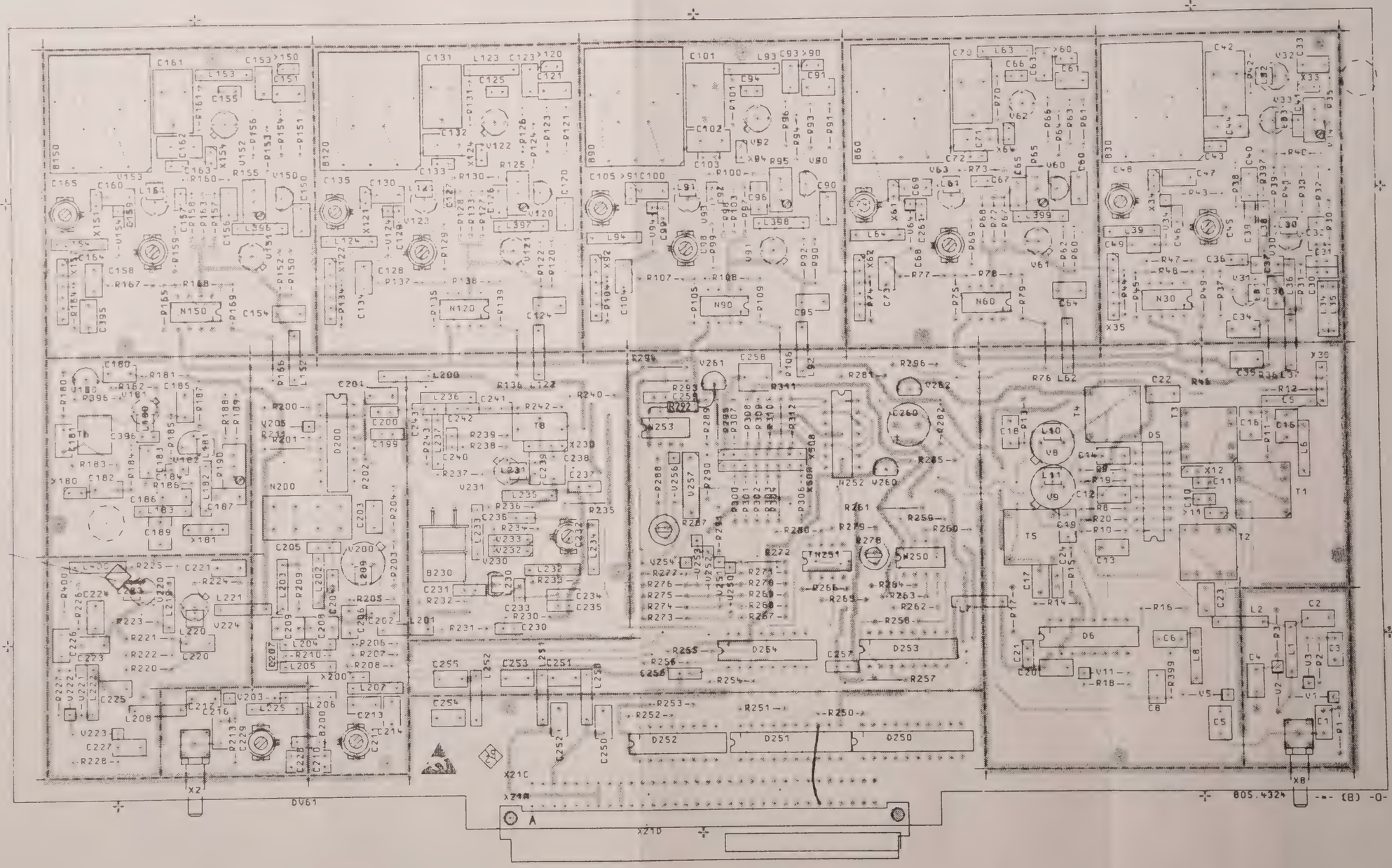

Ansicht und Leitungsfuhrung Lotseite
View of tracks on solder side

VARIANTENERKLÄRUNG/VERSION
VAR 02 – GRUNDAUSFÜHRUNG/BASIC MODEL

I	32765	11.87	GN
K	37 062	01.88	Pa
M	37 062 (24)	10.88	Gn

Maße ohne Toleranzangabe

Maßstab 1 : 1

Halbzeug Werkstoff

1KGF Tag Name
Bearb. 11.87 GN
Gepr.
Norm

Benennung: IF - FILTER 2

ROHDE & SCHWARZ

Zeichn.-Nr. 805.4318.01 EE

Änderungs Mitteilung

zu Gerät FSA

804.8010 V

hierzu HVC 2501

ACHTUNG EGB!
Elektrostatisch gefährdete Bauelemente erfordern eine besondere Handhabung

ATTENTION ESD!
Electrostatic sensitive devices require a special handling

ROHDE&SCHWARZ

SERVICE DOCUMENTATION

Step Gain

805.3311.02

Contents

		Page
6	**Service Instructions Step Gain**	6.1
6.1	**Function Description**	6.1
6.1.1	10-dB Amplifier (Switchable)	6.1
6.1.2	20- and 40-dB Amplifiers	6.1
6.1.2.1	20-dB Amplifier	6.1
6.1.2.2	40-dB Amplifier	6.2
6.1.3	Amplifier with Analog and Digital Adjustment	6.2
6.1.4	1-dB Steps	6.2
6.1.5	0.1-dB Steps	6.3
6.1.6	Output Buffer	6.3
6.1.7	Level Detectors for the Selftest	6.3
6.1.8	Gain Setting	6.3
6.1.8.1	Control	6.3
6.1.8.2	Truth Table	6.4
6.2	**Testing and Adjustment**	6.7
6.2.1	Power Supply	6.7
6.2.2	Testing the Control	6.8
6.2.3	Adjusting and Testing the Variable Amplifier	6.8
6.2.4	Testing the Level Detectors	6.8
6.2.5	Adjusting and Testing the Switchable Amplifiers and Attenuating Elements	6.9
6.3	**Troubleshooting**	6.10

Parts lists
Circuit diagrams
Component location plans

6 Service Instructions Step Gain

(See circuit diagram 805.3311 S)

6.1 Function Description

The step gain module amplifies signals in the frequency range 21.4 ± 1.5 MHz by typically 0 to 77 ± 5 dB, selectable in 0.1-dB steps. The 10-dB steps are implemented by combining amplifiers with gains of 10, 20 and 40 dB; the 1-dB and 0.1-dB steps are produced by combining attenuating elements with steps of 1, 2, 4, 8 and 0.1, 0.2, 0.4 and 0.8 dB. There is a non-switchable basic gain of 10 dB in addition which can be modified in analog and digital modes by ± 5 dB.

The analog gain setting with R155 is used to adjust the gain of the complete instrument; the digital setting via the microprocessor interface enables automatic calibration of the instrument.

Level detectors are provided at the input and output to determine during the selftest whether the module is functioning correctly.

6.1.1 10-dB Amplifier (Switchable)

The 10-dB amplifier consists of a transistor V2 which has a negative feedback via transformer T1 and whose working point is controlled by V3. The gain is 12 dB and the input and output impedances 50 Ω. The gain is reduced by 2 dB by means of the following attenuating element. The switching step can be adjusted to 10 dB using R27. The parallel circuit comprising R219 and R28 compensates temperature-dependent changes in gain.

The block diagram 6-2 shows the principle of gain switchover. Diodes are used as the switches and are controlled by the microprocessor interface via comparator N2A. V16, V6 and V37 conduct with the gain switched off, otherwise V8 and V9 conduct.

The resistor R16 is connected in parallel to the amplifier input if switch V8 is open (V16 closed) in order to prevent uncontrolled oscillation of the stage. R250 closes, in conjunction with the input impedance of the attenuating elements (100 Ω), the amplifier with the correct characteristic impedance in each switching state.

6.1.2 20- and 40-dB Amplifiers

In order to keep the accuracy of the set gain high with any switch combination, the gain of each step must be independent of the switching condition of the following step. This is achieved in that the input impedance of these steps is always 100 Ω. Each step is therefore loaded with the same resistance.

6.1.2.1 20-dB Amplifier

The 20-dB amplifier consists of the transistors V355, V356 and V362.

The gain is determined by the resistors R356, R359 and R360 and can be adjusted with R360. The input impedance is determined by R358.

The gain is switched over by comparator N2C. V350 and V365 conduct if the amplifier is switched on, and V351 and V366 are off. The reverse applies if the amplifier is switched off.

6.1.2.2 40-dB Amplifier

The 40-dB stage consists of two successive 20-dB amplifiers with V315, V316 and V321 or V322, V324 and V330. Their gain can be adjusted using R329.

The IF signal is either applied via the amplifier by means of diode switches or bypassed with a low attenuation. Fig. 6-1 shows the signal path in both cases and the respective switching condition of the diodes. Switching over is carried out by N2B.

The amplifier sequence is terminated by R121 which provides a resistance of 100 Ω together with the input impedance of the 0.1 dB stages (1 kΩ).

40-dB amplifier switched off:

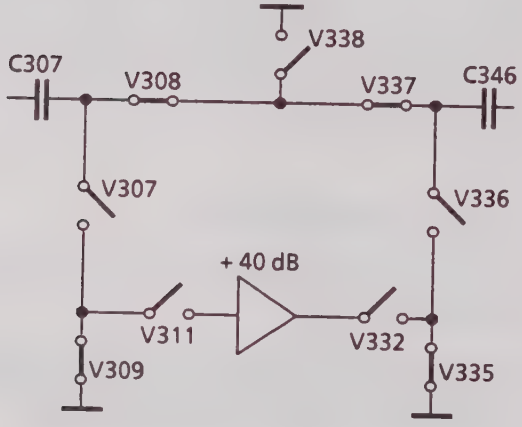

40-dB amplifier switched on:

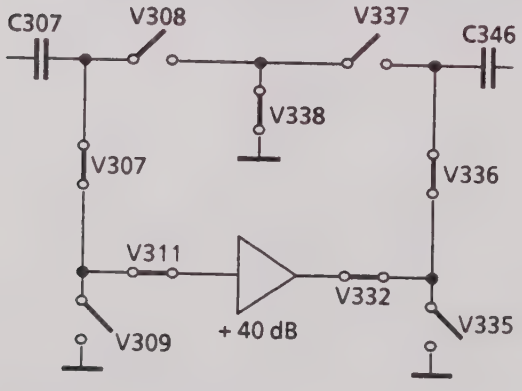

Fig. 6-1 Switching status of diodes

6.1.3 Amplifier with Analog and Digital Adjustment

This has basically the same design as the 20-dB amplifier with transistors V291, V292 and V301 but has the PIN diode V299 in the negative feedback branch as a variable resistor. Its working point is set by the voltage-controlled current source formed by V47 and N4A. The gain can be varied between 5 and 15 dB in this manner.

Since there is a non-linear relationship between current and gain, but the change in gain with digital control is to be in uniform steps as far as possible, an equalization network (V103, V107, R100 to R110) is required in addition. The gradient can be adapted by R109 of the respective PIN diode.

The current source is driven via the D/A converter D5 and the operational amplifier N4B. An additional current is applied to N4B via R154 whose magnitude can be adjusted using R155. Analog gain changes of ± 2 dB are then possible. The gain can be modified by -2 to +4 dB via the microprocessor interface and the D/A converter.

The D/A converter contains a temperature-controlled reference voltage of -10 V via V72 and N4D. The bias voltage of +10 V for the equalization network is obtained from this voltage via N4C.

6.1.4 1-dB Steps

The 1-dB steps are designed as selectable attenuating elements in an L-configuration. The input impedance is 100 Ω.

The graduation of 1, 2, 4 and 8 dB enables simple digital control via the comparators N260A to N260D and the microprocessor interface.

The inductors L265 to L280 are connected in parallel to the diodes used as switches in the circuit (V265, V270, V275 and V280) in order to increase the stopband attenuation. Together with the blocking capacitance of the diodes, the inductors form a resonance circuit tuned to approx. 21.4 MHz.

The attenuation values can be adjusted using R253 (8 dB), R256 (4 dB), R259 (2 dB) and R262 (1 dB).

6.1.5 0.1-dB Steps

These consist of a voltage divider whose series resistance is partially or completely bypassed by the switching diodes V38 to V42. The terminating resistor is R134 in parallel to R140 and R141. N3A to D are used for the control.

6.1.6 Output Buffer

The output buffer consists of the emitter followers V42 and V145. It provides the 0.1-dB steps with the required terminating resistance independent of the external loading. Its output impedance is set to 50 Ω using R146 and C146.

6.1.7 Level Detectors for the Selftest

A rectifier (V4 or V48) is provided at the input and output of the module in order to monitor the level during the selftest of the instrument. The rectifiers are coupled at high impedance to the signal path via the source followers V1 and V46.

The operational amplifiers N1 and N5 amplify the DC voltage and compensate temperature-dependent variations together with V5 and V49.

6.1.8 Gain Setting

6.1.8.1 Control

The module functions are controlled by the microprocessor via the latches D1, D2 and D3 and the address decoder D4.

A control command is read in by means of the following pulse sequence:

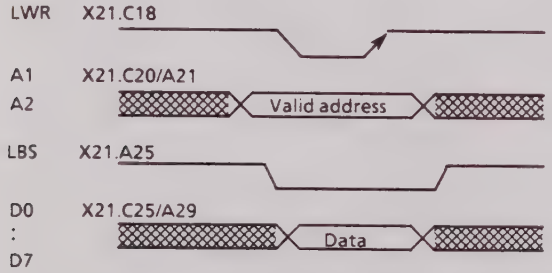

6.1.8.2 Truth Table

A1	A2	DØ	D1	D2	D3	D4	D5	D6	D7	Function
Ø	Ø	1	Ø	Ø	X	X	X	X	X	10-dB amplifier on
		Ø	1	Ø	X	X	X	X	X	20-dB amplifier on
		Ø	Ø	1	X	X	X	X	X	40-dB amplifier on
		Ø	Ø	Ø	X	X	X	X	X	All amplifiers off
										Attenuating elements
1	Ø	Ø	Ø	Ø	Ø	Ø	Ø	Ø	Ø	0 dB
		1	Ø	Ø	Ø	Ø	Ø	Ø	Ø	0.1 dB
		Ø	1	Ø	Ø	Ø	Ø	Ø	Ø	0.2 dB
		Ø	Ø	1	Ø	Ø	Ø	Ø	Ø	0.4 dB
		Ø	Ø	Ø	1	Ø	Ø	Ø	Ø	0.8 dB
		Ø	Ø	Ø	Ø	1	Ø	Ø	Ø	1 dB
		Ø	Ø	Ø	Ø	Ø	1	Ø	Ø	2 dB
		Ø	Ø	Ø	Ø	Ø	Ø	1	Ø	4 dB
		Ø	Ø	Ø	Ø	Ø	Ø	Ø	1	8 dB
Ø	1	Ø → 85_{10} → 255_{10} −2 dB → 0 dB → + 4 dB								Variable gain

Step gain module

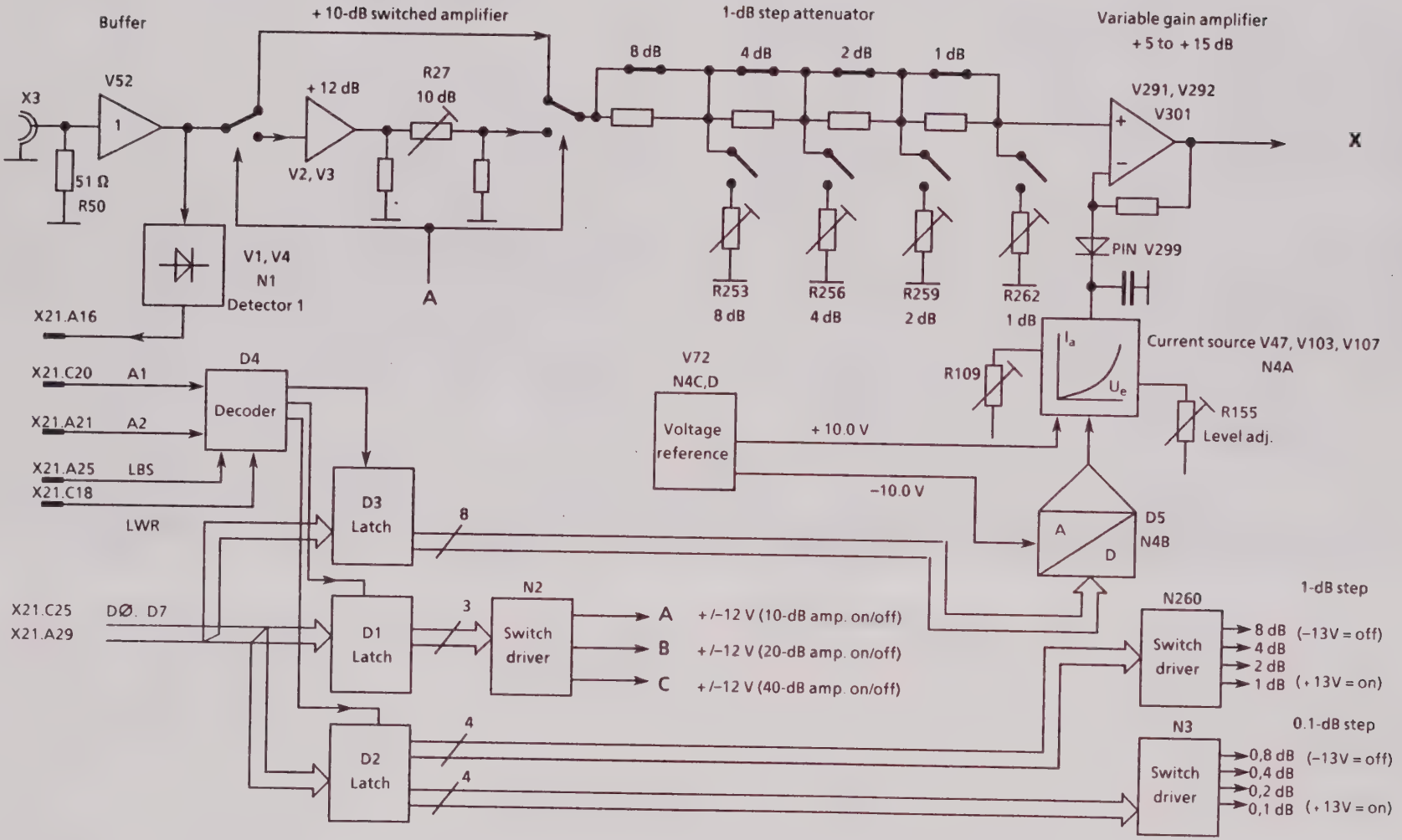

Fig. 6-2 Block diagram of step gain module (part 1)

Step gain module

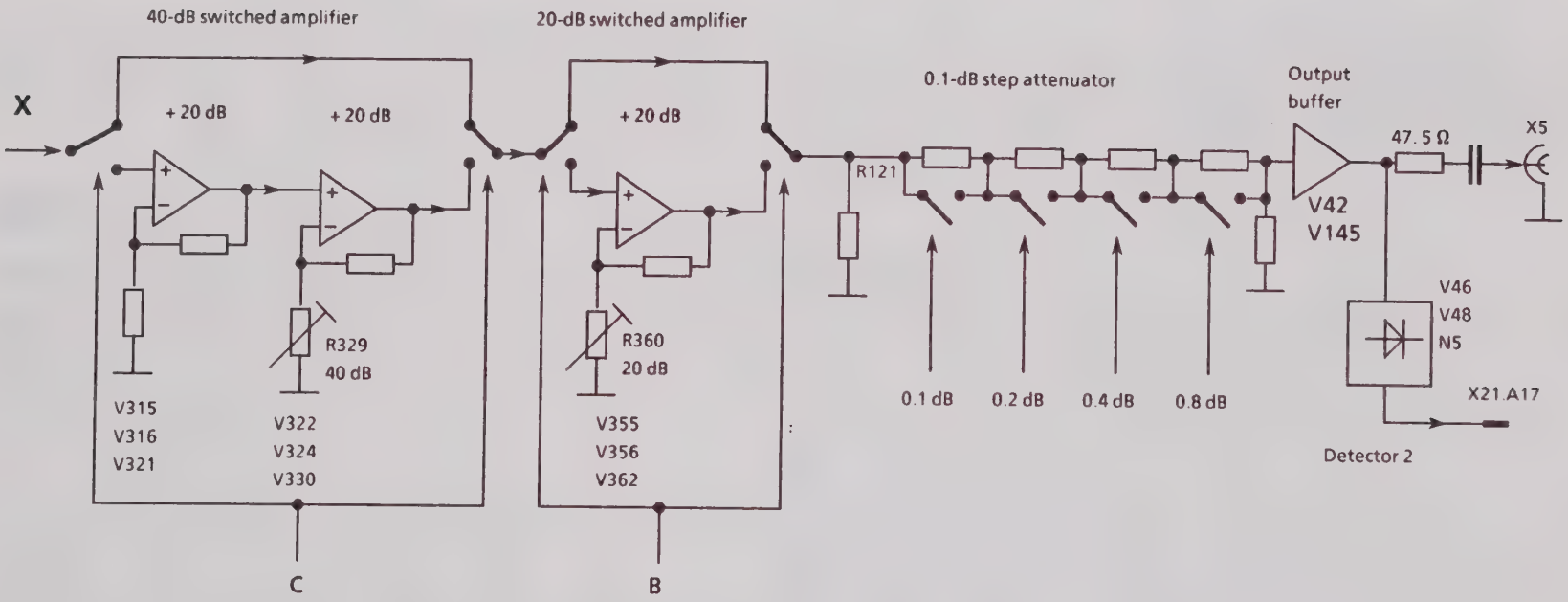

Fig. 6-2 Block diagram of step gain module (part 2)

6.2 Testing and Adjustment

Equipment required

- Digital voltmeter (DVM)
  e.g. **UDS5**
- Signal generator (21.4 MHz; –10 dBm)
  e.g. **SMS**
- Precision attenuation set (0 to 70 dB in 1-dB steps)
  e.g. **DPSP**
- Bandpass filter 21.4 MHz (bandwidth < 1 MHz)
- RF Voltmeter
  e.g. **URV5**

Test setup

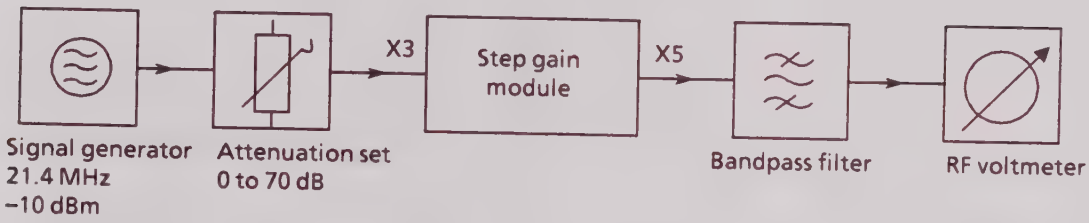

6.2.1 Power Supply

Pin	Voltage	Current
X21.A,C 7	+ 15 V ± 0.3 V	250 to 300 mA
X21.A,C 9	–15 V ± 0.3 V	100 to 150 mA
X21.A,C 31	+ 5 V ± 0.2 V	2 to 20 mA
X21.A,C 1,32	0 V	—

6.2.2 Testing the Control

Addr.	Data	Test point	Measured value
–	–	X21.C17	+13.5 V ±0.3 V
–	–	X21.A18	–10 V ±0.5 V
2	ø	X21.A30	0 ±50 mV (R155 fully counterclockwise)
2	255_{10}	X21.A30	+3.1 to +3.5 V
1	ø	X21.A11 C11 A12 C12 A13 C13 A14 C14	–12 V to –15 V
1	255_{10}	X21.A11 C11 A12 C12 A13 C13 A14 C14	+11 V to +15 V
ø	ø	X12.A15 C15 C16	–11 V to –15 V
ø	15_{10}	X21.A15 C15 C16	+10 V to +15 V

6.2.3 Adjusting and Testing the Variable Amplifier

Test setup as in Section 6.2.

Addr.	Data	Attenuation set	Adjustment and measured value
a)			
ø	ø	0 dB	Remove X150, measured value at X5: –16.5 dBm ±1 dB
1	ø		
2	ø		
b)			Connect X150, adjust level at X5 to +6 ±0.1 dB with respect to *a)* using R109
c)			
ø	ø	10 dB	Adjust level at X5 to 0 ±0.1 dB with respect to *a)* using R155
1	ø		
2	85_{10}		
d)			
ø	ø	10 dB	Level at X5 with respect to *a)*
1	ø		
2	ø		
2	60_{10}		–2.0 dB ±0.3 dB
2	180_{10}		–0.6 dB ±0.3 dB
2	255_{10}		+3.3 dB ±0.5 dB
			+4.5 dB ±0.5 dB

6.2.4 Testing the Level Detectors

Remove the filter and RF voltmeter from X5, adjust generator level to -2 dBm and attenuation set to 0 dB.

Apply data words 1 (address ø), 96_{10} (address 1) and 85_{10} (address 2).

Check the following voltages using the DVM:

At X21.A16: +1.2 V ±0.3 V

At X21.A17: +1.5 V ±0.3 V

6.2.5 Adjusting and Testing the Switchable Amplifiers and Attenuating Elements

Both covers must be fitted. Test setup as in Section 6.2.

Addr.	Data	Attenuation set	Measured value at X5	Adjustment	
a)					
Ø	Ø				
1	Ø	0 dB	–6.5 dBm ± 0.5 dB	—	
2	85_{10}				
b)			Measured values with respect to *a)*		
Ø	Ø				
2	85_{10}				
1	Ø		0.0 dB ± 0.02 dB		
1	1		–0.1 dB ± 0.02 dB		
1	2		–0.2 dB ± 0.02 dB		
1	3		–0.3 dB ± 0.02 dB	0.1-dB steps	
1	4	0 dB	–0.4 dB ± 0.02 dB		
1	5		–0.5 dB ± 0.02 dB		
1	6		–0.6 dB ± 0.02 dB		
1	7		–0.7 dB ± 0.02 dB		
1	8		–0.8 dB ± 0.02 dB		
1	9		–0.9 dB ± 0.02 dB		
c)					
Ø	Ø				
2	85_{10}	15 dB	Note measured value	—	
1	Ø				
d)			Measured values with respect to *c)*		
1	16	14	0 ± 0.02 dB	R262	
1	32	13	0 ± 0.02 dB	R259	
1	48	12	0 ± 0.02 dB	—	
1	64	11	0 ± 0.02 dB	R256	
1	80	10	0 ± 0.02 dB	—	1-dB steps
1	96	9	0 ± 0.03 dB	—	
1	112	8	0 ± 0.04 dB	—	
1	128	7	0 ± 0.02 dB	R253	
1	144	6	0 ± 0.04 dB	—	
1	160	5	0 ± 0.04 dB	—	
e)					
1	Ø				
2	85_{10}	0 dB	Note measured value	—	
Ø	Ø				
f)			Measured values with respect to *e)*		
Ø		10 dB	0 ± 0.02 dB	R27	
Ø		20 dB	0 ± 0.02 dB	R360	
Ø		30 dB	0 ± 0.02 dB	—	
Ø		40 dB	0 ± 0.02 dB	R329	10-dB steps
Ø		50 dB	0 ± 0.03 dB	—	
Ø		60 dB	0 ± 0.3 dB	—	
Ø		70 dB	0 ± 0.3 dB	—	

6.3 Troubleshooting

The control should first be checked if gain errors occur, and then the diode selectors and their drivers.

The faulty part of the amplifier can easily be detected by carrying out the adjustments listed in Section 6.2.5.

ROHDE&SCHWARZ

Schaltteillisten
Stromläufe
Bestückungspläne

Part lists
Circuit diagrams
Components plans

Listes des pièces détachées
Schémas de Circuit
Plans des composants

(R 29500 BI 2)
895.1000 BL 2

Kennz. Comp.No.	Benennung Designation	Sachnummer Stock No.	Hersteller Manufacturer	Bezeichnung Designation	enthalten in contained in
.	ZUGEH.STROML./CIRC.DIAGR. 805.3311 S				
C4	CC 100NF+-10%50V5K1200VIE CAPACITOR	CC 084.5350	UNION CARB	CK05BX104K	
C5	CC 100NF+-10%50V5K1200VIE CAPACITOR	CC 084.5350	UNION CARB	CK05BX104K	
C10	CC 10NF-20+50%7X8R4000 CAPACITOR	CC 087.7525	VALVO	2222 63051 64051103	
C11	CC 10NF-20+50%7X8R4000 CAPACITOR	CC 087.7525	VALVO	2222 63051 64051103	
C12	CC 10NF-20+50%7X8R4000 CAPACITOR	CC 087.7525	VALVO	2222 63051 64051103	
C13	CK 47NF+-5%63V5RM MKT CAPACITOR	CK 099.2917	WIMA	MKS2/63/0,047UF/5%	
C14	CC 10NF-20+50%7X8R4000 CAPACITOR	CC 087.7525	VALVO	2222 63051 64051103	
C15	CC 10NF-20+50%7X8R4000 CAPACITOR	CC 087.7525	VALVO	2222 63051 64051103	
C16	CC 100NF+-10%50V5K1200VIE CAPACITOR	CC 084.5350	UNION CARB	CK05BX104K	
C17	CC 10NF-20+50%7X8R4000 CAPACITOR	CC 087.7525	VALVO	2222 63051 64051103	
C18	CC 10NF-20+50%7X8R4000 CAPACITOR	CC 087.7525	VALVO	2222 63051 64051103	
C20	CC 10NF-20+50%7X8R4000 CAPACITOR	CC 087.7525	VALVO	2222 63051 64051103	
C23	CC 1PF+-0,25PF3X4P100 CAPACITOR	CC 087.6170	VALVO	2222 678 03108	
C24	CK 47NF+-5%63V5RM MKT CAPACITOR	CK 099.2917	WIMA	MKS2/63/0,047UF/5%	
C25	CE 2,2UF-10+50% 63V 9X13 ELECTROLYTIC CAPACITOR	CE 022.7637	ROEDERST	ELKO EK 2/63	
C26	CK 47NF+-5%63V5RM MKT CAPACITOR	CK 099.2917	WIMA	MKS2/63/0,047UF/5%	
C27	CK 47NF+-5%63V5RM MKT CAPACITOR	CK 099.2917	WIMA	MKS2/63/0,047UF/5%	
C35	CC 10NF-20+50%7X8R4000 CAPACITOR	CC 087.7525	VALVO	2222 63051 64051103	
C36	CC 100NF+-10%50V5K1200VIE CAPACITOR	CC 084.5350	UNION CARB	CK05BX104K	
C37	CC 10NF-20+50%7X8R4000 CAPACITOR	CC 087.7525	VALVO	2222 63051 64051103	
C39	CC 10NF-20+50%7X8R4000 CAPACITOR	CC 087.7525	VALVO	2222 63051 64051103	
C50	CC 10NF-20+50%7X8R4000 CAPACITOR	CC 087.7525	VALVO	2222 63051 64051103	
C53	CC 10NF-20+50%7X8R4000 CAPACITOR	CC 087.7525	VALVO	2222 63051 64051103	
C55	CK 1UF+-10%50V5RM MKT CAPACITOR	CK 099.2998	WIMA	MKS2/50/1UF/10%	
C83	CK 47NF+-5%63V5RM MKT CAPACITOR	CK 099.2917	WIMA	MKS2/63/0,047UF/5%	
C84	CK 47NF+-5%63V5RM MKT CAPACITOR	CK 099.2917	WIMA	MKS2/63/0,047UF/5%	
C85	CK 47NF+-5%63V5RM MKT CAPACITOR	CK 099.2917	WIMA	MKS2/63/0,047UF/5%	
C86	CK 47NF+-5%63V5RM MKT CAPACITOR	CK 099.2917	WIMA	MKS2/63/0,047UF/5%	
C87	CK 47NF+-5%63V5RM MKT CAPACITOR	CK 099.2917	WIMA	MKS2/63/0,047UF/5%	
C88	CK 47NF+-5%63V5RM MKT CAPACITOR	CK 099.2917	WIMA	MKS2/63/0,047UF/5%	
C89	CK 47NF+-5%63V5RM MKT CAPACITOR	CK 099.2917	WIMA	MKS2/63/0,047UF/5%	
C90	CK 47NF+-5%63V5RM MKT CAPACITOR	CK 099.2917	WIMA	MKS2/63/0,047UF/5%	
C91	CC 10NF-20+50%7X8R4000 CAPACITOR	CC 087.7525	VALVO	2222 63051 64051103	
C92	CC 10NF-20+50%7X8R4000 CAPACITOR	CC 087.7525	VALVO	2222 63051 64051103	
C93	CC 10NF-20+50%7X8R4000 CAPACITOR	CC 087.7525	VALVO	2222 63051 64051103	
C94	CC 10NF-20+50%7X8R4000 CAPACITOR	CC 087.7525	VALVO	2222 63051 64051103	
C95	CC 10NF-20+50%7X8R4000 CAPACITOR	CC 087.7525	VALVO	2222 63051 64051103	

Für diese Unterlage behalten wir uns alle Rechte vor

Kennz. Comp.No.	Benennung Designation	Sachnummer Stock No.	Hersteller Manufacturer	Bezeichnung Designation	enthalten in contained in
C102	CK 47NF+-5%63V5RM MKT CAPACITOR	CK 099.2917	WIMA	MKS2/63/0,047UF/5%	
C103	CC 12PF+-2%3X4NPO CAPACITOR	CC 087.6435	VALVO	2222 678 10129	
C106	CC 10NF-20+50%7X8R4000 CAPACITOR	CC 087.7525	VALVO	2222 63051 64051103	
C114	CC 10NF-20+50%7X8R4000 CAPACITOR	CC 087.7525	VALVO	2222 63051 64051103	
C116	CC 10NF-20+50%7X8R4000 CAPACITOR	CC 087.7525	VALVO	2222 63051 64051103	
C117	CC 10NF-20+50%7X8R4000 CAPACITOR	CC 087.7525	VALVO	2222 63051 64051103	
C119	CC 100NF+-10%50V5K1200VIE CAPACITOR	CC 084.5350	UNION CARB	CKO5BX104K	
C120	CC 10NF-20+50%7X8R4000 CAPACITOR	CC 087.7525	VALVO	2222 63051 64051103	
C121	CC 10NF-20+50%7X8R4000 CAPACITOR	CC 087.7525	VALVO	2222 63051 64051103	
C130	CC 82PF+-2%6X7NPO CAPACITOR	CC 087.6535	VALVO	2222 678 10829	
C131	CC 100NF+-10%50V5K1200VIE CAPACITOR	CC 084.5350	UNION CARB	CKO5BX104K	
C135	CC 100NF+-10%50V5K1200VIE CAPACITOR	CC 084.5350	UNION CARB	CKO5BX104K	
C136	CC 100NF+-10%50V5K1200VIE CAPACITOR	CC 084.5350	UNION CARB	CKO5BX104K	
C137	CE 47UF-10+50% 40V 9X13 ELECTROLYTIC CAPACITOR	CE 006.7142	ROEDERST	EK 00 CB 247 G	
C138	CC 100NF+-10%50V5K1200VIE CAPACITOR	CC 084.5350	UNION CARB	CKO5BX104K	
C139	CC 100NF+-10%50V5K1200VIE CAPACITOR	CC 084.5350	UNION CARB	CKO5BX104K	
C140	CE 47UF-10+50% 40V 9X13 ELECTROLYTIC CAPACITOR	CE 006.7142	ROEDERST	EK 00 CB 247 G	
C141	CC 100NF+-10%50V5K1200VIE CAPACITOR	CC 084.5350	UNION CARB	CKO5BX104K	
C142	CC 100NF+-10%50V5K1200VIE CAPACITOR	CC 084.5350	UNION CARB	CKO5BX104K	
C146	CC 10NF-20+50%7X8R4000 CAPACITOR	CC 087.7525	VALVO	2222 63051 64051103	
C251	CK 47NF+-5%63V5RM MKT CAPACITOR	CK 099.2917	WIMA	MKS2/63/0,047UF/5%	
C254	CK 47NF+-5%63V5RM MKT CAPACITOR	CK 099.2917	WIMA	MKS2/63/0,047UF/5%	
C257	CK 47NF+-5%63V5RM MKT CAPACITOR	CK 099.2917	WIMA	MKS2/63/0,047UF/5%	
C260	CK 47NF+-5%63V5RM MKT CAPACITOR	CK 099.2917	WIMA	MKS2/63/0,047UF/5%	
C265	CC 10NF-20+50%7X8R4000 CAPACITOR	CC 087.7525	VALVO	2222 63051 64051103	
C266	CC 10NF-20+50%7X8R4000 CAPACITOR	CC 087.7525	VALVO	2222 63051 64051103	
C267	CC 10NF-20+50%7X8R4000 CAPACITOR	CC 087.7525	VALVO	2222 63051 64051103	
C268	CK 100NF+-5%63V5RM MKT CAPACITOR	CK 099.2930	WIMA	MKS/2/63/0,1UF/5%	
C269	CK 100NF+-5%63V5RM MKT CAPACITOR	CK 099.2930	WIMA	MKS/2/63/0,1UF/5%	
C270	CC 10NF-20+50%7X8R4000 CAPACITOR	CC 087.7525	VALVO	2222 63051 64051103	
C272	CC 10NF-20+50%7X8R4000 CAPACITOR	CC 087.7525	VALVO	2222 63051 64051103	
C273	CC 10NF-20+50%7X8R4000 CAPACITOR	CC 087.7525	VALVO	2222 63051 64051103	
C275	CC 10NF-20+50%7X8R4000 CAPACITOR	CC 087.7525	VALVO	2222 63051 64051103	
C277	CC 10NF-20+50%7X8R4000 CAPACITOR	CC 087.7525	VALVO	2222 63051 64051103	
C278	CC 10NF-20+50%7X8R4000 CAPACITOR	CC 087.7525	VALVO	2222 63051 64051103	
C280	CC 10NF-20+50%7X8R4000 CAPACITOR	CC 087.7525	VALVO	2222 63051 64051103	
C282	CC 10NF-20+50%7X8R4000 CAPACITOR	CC 087.7525	VALVO	2222 63051 64051103	
C283	CC 10NF-20+50%7X8R4000 CAPACITOR	CC 087.7525	VALVO	2222 63051 64051103	
C291	CC 10NF-20+50%7X8R4000 CAPACITOR	CC 087.7525	VALVO	2222 63051 64051103	

Für diese Unterlage behalten wir uns alle Rechte vor

Kennz. Comp.No.	Benennung Designation	Sachnummer Stock No.	Hersteller Manufacturer	Bezeichnung Designation	enthalten in contained in
C292	CC 5,6PF+-0,25PF3X4NP0 CAPACITOR	CC 087.6393	VALVO	2222 678 09568	
C296	CC 10NF-20+50%7X8R4000 CAPACITOR	CC 087.7525	VALVO	2222 63051 64051103	
C298	CC 10NF-20+50%7X8R4000 CAPACITOR	CC 087.7525	VALVO	2222 63051 64051103	
C299	CC 10NF-20+50%7X8R4000 CAPACITOR	CC 087.7525	VALVO	2222 63051 64051103	
C301	CC 10NF-20+50%7X8R4000 CAPACITOR	CC 087.7525	VALVO	2222 63051 64051103	
C302	CK 47NF+-5%63V5RM MKT CAPACITOR	CK 099.2917	WIMA	MKS2/63/0,047UF/5%	
C303	CC 10NF-20+50%7X8R4000 CAPACITOR	CC 087.7525	VALVO	2222 63051 64051103	
C307	CC 10NF-20+50%7X8R4000 CAPACITOR	CC 087.7525	VALVO	2222 63051 64051103	
C309	CC 10NF-20+50%7X8R4000 CAPACITOR	CC 087.7525	VALVO	2222 63051 64051103	
C310	CC 10NF-20+50%7X8R4000 CAPACITOR	CC 087.7525	VALVO	2222 63051 64051103	
C311	CC 10NF-20+50%7X8R4000 CAPACITOR	CC 087.7525	VALVO	2222 63051 64051103	
C314	CC 2,2PF+-0,25PF3X4NP0 CAPACITOR	CC 087.6341	VALVO	2222 678 09228	
C316	CC 10NF-20+50%7X8R4000 CAPACITOR	CC 087.7525	VALVO	2222 63051 64051103	
C320	CC 10NF-20+50%7X8R4000 CAPACITOR	CC 087.7525	VALVO	2222 63051 64051103	
C321	CK 47NF+-5%63V5RM MKT CAPACITOR	CK 099.2917	WIMA	MKS2/63/0,047UF/5%	
C322	CC 10NF-20+50%7X8R4000 CAPACITOR	CC 087.7525	VALVO	2222 63051 64051103	
C323	CC 3,9PF+-0,25PF3X4NP0 CAPACITOR	CC 087.6370	VALVO	2222 678 09398	
C324	CC 10NF-20+50%7X8R4000 CAPACITOR	CC 087.7525	VALVO	2222 63051 64051103	
C325	CC 10NF-20+50%7X8R4000 CAPACITOR	CC 087.7525	VALVO	2222 63051 64051103	
C326	CC 10NF-20+50%7X8R4000 CAPACITOR	CC 087.7525	VALVO	2222 63051 64051103	
C330	CK 100NF+-5%63V5RM MKT CAPACITOR	CK 099.2930	WIMA	MKS/2/63/0,1UF/5%	
C331	CC 10NF-20+50%7X8R4000 CAPACITOR	CC 087.7525	VALVO	2222 63051 64051103	
C333	CC 10NF-20+50%7X8R4000 CAPACITOR	CC 087.7525	VALVO	2222 63051 64051103	
C335	CC 10NF-20+50%7X8R4000 CAPACITOR	CC 087.7525	VALVO	2222 63051 64051103	
C338	CC 10NF-20+50%7X8R4000 CAPACITOR	CC 087.7525	VALVO	2222 63051 64051103	
C340	CC 10NF-20+50%7X8R4000 CAPACITOR	CC 087.7525	VALVO	2222 63051 64051103	
C345	CC 10NF-20+50%7X8R4000 CAPACITOR	CC 087.7525	VALVO	2222 63051 64051103	
C346	CC 10NF-20+50%7X8R4000 CAPACITOR	CC 087.7525	VALVO	2222 63051 64051103	
C352	CC 10NF-20+50%7X8R4000 CAPACITOR	CC 087.7525	VALVO	2222 63051 64051103	
C354	CC 3,9PF+-0,25PF3X4NP0 CAPACITOR	CC 087.6370	VALVO	2222 678 09398	
C355	CC 10NF-20+50%7X8R4000 CAPACITOR	CC 087.7525	VALVO	2222 63051 64051103	
C361	CC 10NF-20+50%7X8R4000 CAPACITOR	CC 087.7525	VALVO	2222 63051 64051103	
C362	CK 47NF+-5%63V5RM MKT CAPACITOR	CK 099.2917	WIMA	MKS2/63/0,047UF/5%	
C365	CC 10NF-20+50%7X8R4000 CAPACITOR	CC 087.7525	VALVO	2222 63051 64051103	
C370	CC 10NF-20+50%7X8R4000 CAPACITOR	CC 087.7525	VALVO	2222 63051 64051103	
C371	CK 47NF+-5%63V5RM MKT CAPACITOR	CK 099.2917	WIMA	MKS2/63/0,047UF/5%	
C372	CK 47NF+-5%63V5RM MKT CAPACITOR	CK 099.2917	WIMA	MKS2/63/0,047UF/5%	
D1	BL PC74HC377P 8XD-FF EN OCTAL D-FLIP-FLOP	BL 806.0045	VALVO	PC74HC377P	

Für diese Unterlage behalten wir uns alle Rechte vor

Kennz. Comp.No.	Benennung Designation	Sachnummer Stock No.	Hersteller Manufacturer	Bezeichnung Designation	enthalten in contained in
D2	BL PC74HC377P 8XD-FF EN OCTAL D-FLIP-FLOP	BL 806.0045	VALVO	PC74HC377P	
D3	BL PC74HC377P 8XD-FF EN OCTAL D-FLIP-FLOP	BL 806.0045	VALVO	PC74HC377P	
D4	BL MM74HC138N 3/8L.DECOD 3-TO-8 LINE DECODER	BL 571.3165	MOTOROLA	MC74HC138N	
D5	BJ MC1408L-8 8B.DA-CONV D/A-CONVERTER	BJ 280.9799	MOTOROLA	MC1408L-8	
L1	LD 100 UH10%8,000HMO,084A CHOKE	LD 067.3101	DELEVAN	DROSSEL1025-68	
L2	LD 100 UH10%8,000HMO,084A CHOKE	LD 067.3101	DELEVAN	DROSSEL1025-68	
L6	LD 47,0UH10%4,500HMO,110A CHOKE	LD 067.3060	DELEVAN	DROSSEL1025-60	
L7	LD 100 UH10%8,000HMO,084A CHOKE	LD 067.3101	DELEVAN	DROSSEL1025-68	
L8	LD 47,0UH10%4,500HMO,110A CHOKE	LD 067.3060	DELEVAN	DROSSEL1025-60	
L12	LD 100 UH10%8,000HMO,084A CHOKE	LD 067.3101	DELEVAN	DROSSEL1025-68	
L20	LF ROHRK.RD3,5X1,2X3 GETR TUBLAR CORE	LF 026.9257			
L25	LD 6,80UH10%2,000HMO,185A CHOKE	LD 026.4178	DELEVAN	DROSSEL1025-40	
L27	LD 100 UH10%8,000HMO,084A CHOKE	LD 067.3101	DELEVAN	DROSSEL1025-68	
L29	LD 100 UH10%8,000HMO,084A CHOKE	LD 067.3101	DELEVAN	DROSSEL1025-68	
L32	LD 100 UH10%8,000HMO,084A CHOKE	LD 067.3101	DELEVAN	DROSSEL1025-68	
L33 ..37	LD 2,20UH10%0,400HMO,415A CHOKE	LD 067.2905	DELEVAN	DROSSEL1025-28	
L42	LF ROHRK.RD3,5X1,2X3 GETR TUBLAR CORE	LF 026.9257			
L53	LD 10 UH 10% 3R3 144 MA CHOKE	LD 026.4184	DELEVAN	DROSSEL1025-44	
L145	LF ROHRK.RD3,5X1,2X3 GETR TUBLAR CORE	LF 026.9257			
L148	LD 100 UH10%8,000HMO,084A CHOKE	LD 067.3101	DELEVAN	DROSSEL1025-68	
L265	LD 22,0UH10%3,300HMO,114A CHOKE	LD 067.3024	DELEVAN	DROSSEL1025-52	
L266	LD 100 UH10%8,000HMO,084A CHOKE	LD 067.3101	DELEVAN	DROSSEL1025-68	
L270	LD 22,0UH10%3,300HMO,114A CHOKE	LD 067.3024	DELEVAN	DROSSEL1025-52	
L271	LD 100 UH10%8,000HMO,084A CHOKE	LD 067.3101	DELEVAN	DROSSEL1025-68	
L275	LD 22,0UH10%3,300HMO,114A CHOKE	LD 067.3024	DELEVAN	DROSSEL1025-52	
L276	LD 100 UH10%8,000HMO,084A CHOKE	LD 067.3101	DELEVAN	DROSSEL1025-68	
L280	LD 22,0UH10%3,300HMO,114A CHOKE	LD 067.3024	DELEVAN	DROSSEL1025-52	
L281	LD 100 UH10%8,000HMO,084A CHOKE	LD 067.3101	DELEVAN	DROSSEL1025-68	
L292	LF ROHRK.RD3,5X1,2X3 GETR TUBLAR CORE	LF 026.9257			
L293	LD 100 UH10%8,000HMO,084A CHOKE	LD 067.3101	DELEVAN	DROSSEL1025-68	
L298	LD 100 UH10%8,000HMO,084A CHOKE	LD 067.3101	DELEVAN	DROSSEL1025-68	
L301	LF ROHRK.RD3,5X1,2X3 GETR TUBLAR CORE	LF 026.9257			
L303	LD 100 UH10%8,000HMO,084A CHOKE	LD 067.3101	DELEVAN	DROSSEL1025-68	
L307	LD 47,0UH10%4,500HMO,110A CHOKE	LD 067.3060	DELEVAN	DROSSEL1025-60	
L309	LD 47,0UH10%4,500HMO,110A CHOKE	LD 067.3060	DELEVAN	DROSSEL1025-60	
L310	LD 100 UH10%8,000HMO,084A CHOKE	LD 067.3101	DELEVAN	DROSSEL1025-68	
L311	LD 47,0UH10%4,500HMO,110A CHOKE	LD 067.3060	DELEVAN	DROSSEL1025-60	
L316	LD 100 UH10%8,000HMO,084A CHOKE	LD 067.3101	DELEVAN	DROSSEL1025-68	

Für diese Unterlage behalten wir uns alle Rechte vor

Kennz. Comp.No.	Benennung Designation	Sachnummer Stock No.	Hersteller Manufacturer	Bezeichnung Designation	enthalten in contained in
L320	LF ROHRK.RD3,5X1,2X3 GETR TUBLAR CORE	LF 026.9257			
L321	LD 100 UH10%8,000HMO,084A CHOKE	LD 067.3101	DELEVAN	DROSSEL1025-68	
L322	LD 100 UH10%8,000HMO,084A CHOKE	LD 067.3101	DELEVAN	DROSSEL1025-68	
L330	LF ROHRK.RD3,5X1,2X3 GETR TUBLAR CORE	LF 026.9257			
L331	LD 100 UH10%8,000HMO,084A CHOKE	LD 067.3101	DELEVAN	DROSSEL1025-68	
L332	LD 47,0UH10%4,500HMO,110A CHOKE	LD 067.3060	DELEVAN	DROSSEL1025-60	
L333	LD 47,0UH10%4,500HMO,110A CHOKE	LD 067.3060	DELEVAN	DROSSEL1025-60	
L338	LD 47,0UH10%4,500HMO,110A CHOKE	LD 067.3060	DELEVAN	DROSSEL1025-60	
L340	LD 100 UH10%8,000HMO,084A CHOKE	LD 067.3101	DELEVAN	DROSSEL1025-68	
L345	LD 47,0UH10%4,500HMO,110A CHOKE	LD 067.3060	DELEVAN	DROSSEL1025-60	
L346	LD 47,0UH10%4,500HMO,110A CHOKE	LD 067.3060	DELEVAN	DROSSEL1025-60	
L356	LD 100 UH10%8,000HMO,084A CHOKE	LD 067.3101	DELEVAN	DROSSEL1025-68	
L362	LF ROHRK.RD3,5X1,2X3 GETR TUBLAR CORE	LF 026.9257			
L363	LD 100 UH10%8,000HMO,084A CHOKE	LD 067.3101	DELEVAN	DROSSEL1025-68	
L366	LD 100 UH10%8,000HMO,084A CHOKE	LD 067.3101	DELEVAN	DROSSEL1025-68	
L370	LD 47,0UH10%4,500HMO,110A CHOKE	LD 067.3060	DELEVAN	DROSSEL1025-60	
L371	LD 100 UH10%8,000HMO,084A CHOKE	LD 067.3101	DELEVAN	DROSSEL1025-68	
N1	BO LF411CN JFET OPAMP OPERATIONAL AMPLIFIER	349.3058	NSC	LF411CN	
N2	BO LM124J 4XL.P.OPAMP OPERATIONAL AMPLIFIER	300.6353	NSC	LM124J	
N3	BO LM124J 4XL.P.OPAMP OPERATIONAL AMPLIFIER	300.6353	NSC	LM124J	
N4	BO LM124J 4XL.P.OPAMP OPERATIONAL AMPLIFIER	300.6353	NSC	LM124J	
N5	BO LF411CN JFET OPAMP OPERATIONAL AMPLIFIER	349.3058	NSC	LF411CN	
N260	BO LM124J 4XL.P.OPAMP OPERATIONAL AMPLIFIER	300.6353	NSC	LM124J	
R1	RL 0,35W 1MOHM+-1%TK50 RESISTOR	RL 082.7862	DRALORIC	SMA0207/1M-F-D	
R2	RL 0,35W 562 OHM+-1%TK50 RESISTOR	RL 083.0461	DRALORIC	SMA0207/562OHM-F-D	
R3	RL 0,35W 10,0KOHM+-1%TK50 RESISTOR	RL 083.1297	DRALORIC	SMA0207/10K-F-D	
R4	RL 0,35W 1MOHM+-1%TK50 RESISTOR	RL 082.7862	DRALORIC	SMA0207/1M-F-D	
R5	RL 0,35W 1MOHM+-1%TK50 RESISTOR	RL 082.7862	DRALORIC	SMA0207/1M-F-D	
R6	RL 0,35W 4,75KOHM+-1%TK50 RESISTOR	RL 083.1097	DRALORIC	SMA0207/4,75K-F-D	
R7	RL 0,35W 47,5KOHM+-1%TK50 RESISTOR	RL 083.1800	DRALORIC	SMA/207/47,5K-F-C	
R8	RL 0,35W 1KOHM+-1%TK50 RESISTOR	RL 082.2160	DRALORIC	SMA0207/1K-F-C	
R9	RL 0,35W 1KOHM+-1%TK50 RESISTOR	RL 082.2160	DRALORIC	SMA0207/1K-F-C	
R11	RL 0,35W 100 OHM+-1%TK50 METALFILM-RESISTOR	RL 082.6543	DRALORIC	SMA0207/100/HM-F-D	
R12	RL 0,35W 1,50KOHM+-1%TK50 RESISTOR	RL 083.0732	DRALORIC	SMA0207/1,50K-F-D	
R14	RL 0,35W 3,92KOHM+-1%TK50 RESISTOR	RL 083.1039	RESISTA	MK2	
R15	RL 0,35W 33,2KOHM+-1%TK50 RESISTOR	RL 083.1674	DRALORIC	SMA0207/33,2K-F-C	
R16	RL 0,35W 47,5 OHM+-1%TK50 RESISTOR	RL 082.9507	DRALORIC	SMA0207/47,50HM-F-D	
R17	RL 0,35W 1,50KOHM+-1%TK50 RESISTOR	RL 083.0732	DRALORIC	SMA0207/1,50K-F-D	

Für diese Unterlage behalten wir uns alle Rechte vor

Kennz. Comp.No.	Benennung Designation	Sachnummer Stock No.	Hersteller Manufacturer	Bezeichnung Designation	enthalten in contained in
R20	RL 0,35W 562 OHM+-1%TK50 RESISTOR	RL 083.0461	DRALORIC	SMA0207/562OHM-F-D	
R21	RL 0,35W 68,1 OHM+-1%TK50 RESISTOR	RL 082.9636	DRALORIC	SMA0207/68,1OHM-F-D	
R22	RL 0,35W 6,81KOHM+-1%TK50 RESISTOR	RL 082.2560	DRALORIC	SMA 0207/6,81K-F-C	
R23	RL 0,35W 47,5KOHM+-1%TK50 RESISTOR	RL 083.1800	DRALORIC	SMA/207/47,5K-F-C	
R24	RL 0,35W 10,0KOHM+-1%TK50 RESISTOR	RL 083.1297	DRALORIC	SMA0207/10K-F-D	
R26	RL 0,35W 562 OHM+-1%TK50 RESISTOR	RL 083.0461	DRALORIC	SMA0207/562OHM-F-D	
R27	RS 0,3W 20 OHM+-10%CERMET TRIMMING POTENTIOMETER	RS 006.9116	BECKMAN	67W 200HM 10%	
R28	RL 0,35W6,81 OHM+-1%TK50 METALFILMRESISTOR	RL 099.8067	RESISTA	MK2 6,81 OHM 1% TK50	
R29	RL 0,35W 1KOHM+-1%TK50 RESISTOR	RL 082.2160	DRALORIC	SMA0207/1K-F-C	
R30	RL 0,35W 1,50KOHM+-1%TK50 RESISTOR	RL 083.0732	DRALORIC	SMA0207/1,50K-F-D	
R32	RL 0,35W 10,0KOHM+-1%TK50 RESISTOR	RL 083.1297	DRALORIC	SMA0207/10K-F-D	
R33	RL 0,35W 10,0KOHM+-1%TK50 RESISTOR	RL 083.1297	DRALORIC	SMA0207/10K-F-D	
R34	RL 0,35W 10,0KOHM+-1%TK50 RESISTOR	RL 083.1297	DRALORIC	SMA0207/10K-F-D	
R35	RL 0,35W 10,0KOHM+-1%TK50 RESISTOR	RL 083.1297	DRALORIC	SMA0207/10K-F-D	
R37	RL 0,35W 825 OHM+-1%TK50 RESISTOR	RL 082.2502	DRALORIC	SMA 0207/825OHM-F-C	
R50	RL 0,35W 51,1 OHM+-1%TK50 RESISTOR	RL 082.9536	DRALORIC	SMA0207/51,1OHM-F-D	
R51	RL 0,35W 10,0KOHM+-1%TK50 RESISTOR	RL 083.1297	DRALORIC	SMA0207/10K-F-D	
R52	RL 0,35W 392 OHM+-1%TK50 RESISTOR	RL 082.2183	DRALORIC	SMA0207/392K-F-C	
R53	RL 0,35W 4,75KOHM+-1%TK50 RESISTOR	RL 083.1097	DRALORIC	SMA0207/4,75K-F-D	
R72	RL 0,35W 1,50KOHM+-1%TK50 RESISTOR	RL 083.0732	DRALORIC	SMA0207/1,50K-F-D	
R73	RL 0,35W 27,4KOHM+-1%TK50 RESISTOR	RL 082.2583	DRALORIC	SMA 0207/27,4K-F-C	
R74	RL 0,35W 1,82KOHM+-1%TK50 RESISTOR	RL 082.2277	DRALORIC	SMA0207/1,82K-F-C	
R75	RL 0,35W 47,5KOHM+-1%TK50 RESISTOR	RL 083.1800	DRALORIC	SMA/207/47,5K-F-C	
R76	RL 0,35W 18,2KOHM+-1%TK50 RESISTOR	RL 083.1480	DRALORIC	SMA/207/18,2K-F-C	
R77	RL 0,35W 10,0KOHM+-1%TK50 RESISTOR	RL 083.1297	DRALORIC	SMA0207/10K-F-D	
R78	RL 0,35W 100KOHM+-1%TK50 RESISTOR	RL 082.1764	DRALORIC	SMA0207/100K-F-C	
R79	RL 0,35W 100KOHM+-1%TK50 RESISTOR	RL 082.1764	DRALORIC	SMA0207/100K-F-C	
R80	RL 0,35W 47,5KOHM+-1%TK50 RESISTOR	RL 083.1800	DRALORIC	SMA/207/47,5K-F-C	
R87	RL 0,35W 1,50KOHM+-1%TK50 RESISTOR	RL 083.0732	DRALORIC	SMA0207/1,50K-F-D	
R88	RL 0,35W 1,50KOHM+-1%TK50 RESISTOR	RL 083.0732	DRALORIC	SMA0207/1,50K-F-D	
R89	RL 0,35W 1,50KOHM+-1%TK50 RESISTOR	RL 083.0732	DRALORIC	SMA0207/1,50K-F-D	
R90	RL 0,35W 1,50KOHM+-1%TK50 RESISTOR	RL 083.0732	DRALORIC	SMA0207/1,50K-F-D	
R100	RL 0,35W 82,5KOHM+-1%TK50 RESISTOR	RL 082.2302	DRALORIC	SMA0207/82,5K-F-C	
R102	RL 0,35W 15,0KOHM+-1%TK50 RESISTOR	RL 083.1400	DRALORIC	SMA0207/15K-F-D	
R104	RL 0,35W 10,0KOHM+-1%TK50 RESISTOR	RL 083.1297	DRALORIC	SMA0207/10K-F-D	
R106	RL 0,35W 6,81KOHM+-1%TK50 RESISTOR	RL 082.2560	DRALORIC	SMA 0207/6,81K-F-C	
R108	RL 0,35W 100KOHM+-1%TK50 RESISTOR	RL 082.1764	DRALORIC	SMA0207/100K-F-C	
R109	RS 0,3W200KOHM+-10%CERMET TRIMMING POTENTIOMETER	RS 006.9174	BECKMAN	67W 200KOHM 10%	
R110	RL 0,35W 33,2KOHM+-1%TK50 RESISTOR	RL 083.1674	DRALORIC	SMA0207/33,2K-F-C	

Für diese Unterlage behalten wir uns alle Rechte vor

Kennz. Comp.No.	Benennung Designation	Sachnummer Stock No.	Hersteller Manufacturer	Bezeichnung Designation	enthalten in contained in
R114	RL 0,35W 100 OHM+-1%TK50 METALFILM-RESISTOR	RL 082.6543	DRALORIC	SMA0207/100/HM-F-D	
R120	RL 0,35W 47,5 OHM+-1%TK50 RESISTOR	RL 082.9507	DRALORIC	SMA0207/47,5OHM-F-D	
R121	RL 0,35W 110 OHM+-1%TK50 RESISTOR	RL 082.9813	DRALORIC	SMA0207/110OHM-F-D	
R122	RL 0,35W 182 OHM+-1%TK50 RESISTOR	RL 083.0010	DRALORIC	SMA0207/182OHM-F-D	
R123	RL 0,35W12,10 OHM+-1%TK50 RESISTOR	RL 082.8930	DRALORIC	SMA0207/12,1OHM-F-D	
R124	RL 0,35W 10,0KOHM+-1%TK50 RESISTOR	RL 083.1297	DRALORIC	SMA0207/10K-F-D	
R125	RL 0,35W 562 OHM+-1%TK50 RESISTOR	RL 083.0461	DRALORIC	SMA0207/562OHM-F-D	
R126	RL 0,35W22,10 OHM+-1%TK50 RESISTOR	RL 082.9188	DRALORIC	SMA0207/22,1OHM-F-D	
R127	RL 0,35W 10,0KOHM+-1%TK50 RESISTOR	RL 083.1297	DRALORIC	SMA0207/10K-F-D	
R128	RL 0,35W 681 OHM+-1%TK50 RESISTOR	RL 083.0490	DRALORIC	SMA0207/681OHM-F-D	
R129	RL 0,35W 47,5 OHM+-1%TK50 RESISTOR	RL 082.9507	DRALORIC	SMA0207/47,5OHM-F-D	
R130	RL 0,35W 10,0KOHM+-1%TK50 RESISTOR	RL 083.1297	DRALORIC	SMA0207/10K-F-D	
R132	RL 0,35W 97,6 OHM+-1%TK50 RESISTOR	RL 082.9771	DRALORIC	SMA0207/97,6OHM-F-D	
R133	RL 0,35W 10,0KOHM+-1%TK50 RESISTOR	RL 083.1297	DRALORIC	SMA0207/10K-F-D	
R134	RL 0,35W 1,62KOHM+-1%TK50 RESISTOR	RL 083.0755	DRALORIC	SMA0207/1,62K-F-D	
R140	RL 0,35W 3,32KOHM+-1%TK50 RESISTOR	RL 083.0990	DRALORIC	SMA0207/3,32K-F-D	
R141	RL 0,35W 10,0KOHM+-1%TK50 RESISTOR	RL 083.1297	DRALORIC	SMA0207/10K-F-D	
R143	RL 0,35W 100 OHM+-1%TK50 METALFILM-RESISTOR	RL 082.6543	DRALORIC	SMA0207/100/HM-F-D	
R144	RL 0,35W 1KOHM+-1%TK50 RESISTOR	RL 082.2160	DRALORIC	SMA0207/1K-F-C	
R145	RL 0,35W 475 OHM+-1%TK50 RESISTOR	RL 083.0390	DRALORIC	SMA0207/475OHM-F-D	
R146	RL 0,35W 47,5 OHM+-1%TK50 RESISTOR	RL 082.9507	DRALORIC	SMA0207/47,5OHM-F-D	
R147	RL 0,35W 47,5 OHM+-1%TK50 RESISTOR	RL 082.9507	DRALORIC	SMA0207/47,5OHM-F-D	
R152	RL 0,35W 10,0KOHM+-1%TK50 RESISTOR	RL 083.1297	DRALORIC	SMA0207/10K-F-D	
R154	RL 0,35W 4,75KOHM+-1%TK50 RESISTOR	RL 083.1097	DRALORIC	SMA0207/4,75K-F-D	
R155	RS 0,75W1000HM+-10%CERMET DEPOS.-CARBON POTENTIOMET	RS 037.7338	BOURNS	3006P-1-100 OHM+-10%	
R156	RL 0,35W 1KOHM+-1%TK50 RESISTOR	RL 082.2160	DRALORIC	SMA0207/1K-F-C	
R157	RL 0,35W 100 OHM+-1%TK50 METALFILM-RESISTOR	RL 082.6543	DRALORIC	SMA0207/100/HM-F-D	
R158	RL 0,35W 3,01KOHM+-1%TK50 RESISTOR	RL 083.0961	DRALORIC	SMA0207/3,01K-F-D	
R159	RL 0,35W 4,75KOHM+-1%TK50 RESISTOR	RL 083.1097	DRALORIC	SMA0207/4,75K-F-D	
R160	RL 0,35W 1MOHM+-1%TK50 RESISTOR	RL 082.7862	DRALORIC	SMA0207/1M-F-D	
R161	RL 0,35W 562 OHM+-1%TK50 RESISTOR	RL 083.0461	DRALORIC	SMA0207/562OHM-F-D	
R162	RL 0,35W 10,0KOHM+-1%TK50 RESISTOR	RL 083.1297	DRALORIC	SMA0207/10K-F-D	
R163	RL 0,35W 1MOHM+-1%TK50 RESISTOR	RL 082.7862	DRALORIC	SMA0207/1M-F-D	
R166	RL 0,35W 1MOHM+-1%TK50 RESISTOR	RL 082.7862	DRALORIC	SMA0207/1M-F-D	
R167	RL 0,35W 68,1KOHM+-1%TK50 RESISTOR	RL 082.2602	DRALORIC	SMA 0207/68,1K-F-C	
R168	RL 0,35W 47,5KOHM+-1%TK50 RESISTOR	RL 083.1800	DRALORIC	SMA/207/47,5K-F-C	
R169	RL 0,35W 1KOHM+-1%TK50 RESISTOR	RL 082.2160	DRALORIC	SMA0207/1K-F-C	
R170	RL 0,35W 1KOHM+-1%TK50 RESISTOR	RL 082.2160	DRALORIC	SMA0207/1K-F-C	
R171	RL 0,35W 1MOHM+-1%TK50 RESISTOR	RL 082.7862	DRALORIC	SMA0207/1M-F-D	

Für diese Unterlage behalten wir uns alle Rechte vor

Kennz. Comp.No.	Benennung Designation	Sachnummer Stock No.	Herstellar Manufacturer	Bezeichnung Designation	enthalten in contained in
R172	RL 0,35W 150 OHM+-1%TK50 RESISTOR	RL 082.9942	DRALORIC	SMA0207/150OHM-F-D	
R173	RL 0,35W 150 OHM+-1%TK50 RESISTOR	RL 082.9942	DRALORIC	SMA0207/150OHM-F-D	
R174	RL 0,35W 150 OHM+-1%TK50 RESISTOR	RL 082.9942	DRALORIC	SMA0207/150OHM-F-D	
R205	RL 0,35W 1MOHM+-1%TK50 RESISTOR	RL 082.7862	DRALORIC	SMA0207/1M-F-D	
R209	RL 0,35W 332 OHM+-1%TK50 RESISTOR	RL 083.0255	DRALORIC	SMA0207/332OHM-F-D	
R217	RL 0,35W22,10 OHM+-1%TK50 RESISTOR	RL 082.9188	DRALORIC	SMA0207/22,1OHM-F-D	
R218	RL 0,35W 332 OHM+-1%TK50 RESISTOR	RL 083.0255	DRALORIC	SMA0207/332OHM-F-D	
R219	RK HEISSL100 OHM 10%0,80W THERMISTOR	008.0068	SIEMENS	HEISSLK1110100OHM	
R223	RL 0,35W 182 OHM+-1%TK50 RESISTOR	RL 083.0010	DRALORIC	SMA0207/182OHM-F-D	
R228	RL 0,35W 10,OKOHM+-1%TK50 RESISTOR	RL 083.1297	DRALORIC	SMA0207/10K-F-D	
R250	RL 0,35W 100 OHM+-1%TK50 METALFILM-RESISTOR	RL 082.6543	DRALORIC	SMA0207/100/HM-F-D	
R251	RL 0,35W 121 OHM+-1%TK50 RESISTOR	RL 082.9859	DRALORIC	SMA0207/121OHM-F-D	
R252	RL 0,35W 182 OHM+-1%TK50 RESISTOR	RL 083.0010	DRALORIC	SMA0207/182OHM-F-D	
R253	RS 0,3W 50 OHM+-10%CERMET TRIMMING POTENTIOMETER	RS 006.9122	BECKMAN	67W 500HM 10%	
R254	RL 0,35W 47,5 OHM+-1%TK50 RESISTOR	RL 082.9507	DRALORIC	SMA0207/47,5OHM-F-D	
R255	RL 0,35W 56,2 OHM+-1%TK50 RESISTOR	RL 082.9571	DRALORIC	SMA0207/56,2OHM-F-D	
R256	RS 0,3W 20 OHM+-10%CERMET TRIMMING POTENTIOMETER	RS 006.9116	BECKMAN	67W 200HM 10%	
R257	RL 0,35W22,10 OHM+-1%TK50 RESISTOR	RL 082.9188	DRALORIC	SMA0207/22,1OHM-F-D	
R258	RL 0,35W12,10 OHM+-1%TK50 RESISTOR	RL 082.8930	DRALORIC	SMA0207/12,1OHM-F-D	
R259	RS 0,3W 10 OHM+-10%CERMET TRIMMING POTENTIOMETER	RS 006.9100	BECKMAN	67W 100HM 10%	
R260	RL 0,35W 10,0 OHM+-1%TK50 RESISTOR	RL 082.8852	DRALORIC	SMA0207/100HM-F-D	
R261	RL 0,35W5,62 OHM+-1% TK50 METALFILMRESISTOR	RL 099.8044	RESISTA	MK2 5,62 OHM 1% TK50	
R262	RS 0,3W 10 OHM+-10%CERMET TRIMMING POTENTIOMETER	RS 006.9100	BECKMAN	67W 100HM 10%	
R265	RL 0,35W 150 OHM+-1%TK50 RESISTOR	RL 082.9942	DRALORIC	SMA0207/150OHM-F-D	
R266	RL 0,35W15 OHM 1%TK50 RESISTOR	RL 082.9020	DRALORIC	SMA0207/15OHM-F-D	
R267	RL 0,35W 562 OHM+-1%TK50 RESISTOR	RL 083.0461	DRALORIC	SMA0207/562OHM-F-D	
R269	RL 0,35W 10,OKOHM+-1%TK50 RESISTOR	RL 083.1297	DRALORIC	SMA0207/10K-F-D	
R270	RL 0,35W 221 OHM+-1%TK50 RESISTOR	RL 083.0084	DRALORIC	SMA0207/221OHM-F-D	
R271	RL 0,35W 47,5 OHM+-1%TK50 RESISTOR	RL 082.9507	DRALORIC	SMA0207/47,5OHM-F-D	
R272	RL 0,35W 562 OHM+-1%TK50 RESISTOR	RL 083.0461	DRALORIC	SMA0207/562OHM-F-D	
R274	RL 0,35W 10,OKOHM+-1%TK50 RESISTOR	RL 083.1297	DRALORIC	SMA0207/10K-F-D	
R275	RL 0,35W 475 OHM+-1%TK50 RESISTOR	RL 083.0390	DRALORIC	SMA0207/475OHM-F-D	
R276	RL 0,35W12,10 OHM+-1%TK50 RESISTOR	RL 082.8930	DRALORIC	SMA0207/12,1OHM-F-D	
R277	RL 0,35W 562 OHM+-1%TK50 RESISTOR	RL 083.0461	DRALORIC	SMA0207/562OHM-F-D	
R279	RL 0,35W 10,OKOHM+-1%TK50 RESISTOR	RL 083.1297	DRALORIC	SMA0207/10K-F-D	
R280	RL 0,35W 825 OHM+-1%TK50 RESISTOR	RL 082.2502	DRALORIC	SMA 0207/825OHM-F-C	
R281	RL 0,35W 100 OHM+-1%TK50 METALFILM-RESISTOR	RL 082.6543	DRALORIC	SMA0207/100/HM-F-D	
R282	RL 0,35W 475 OHM+-1%TK50 RESISTOR	RL 083.0390	DRALORIC	SMA0207/475OHM-F-D	
R284	RL 0,35W 10,OKOHM+-1%TK50 RESISTOR	RL 083.1297	DRALORIC	SMA0207/10K-F-D	

Für diese Unterlage behalten wir uns alle Rechte vor

Kennz. Comp.No.	Benennung Designation	Sachnummer Stock No.	Hersteller Manufacturer	Bezeichnung Designation	enthalten in contained in
R290	RL 0,35W 100 OHM+-1%TK50 METALFILM-RESISTOR	RL 082.6543	DRALORIC	SMA0207/100/HM-F-D	
R292	RL 0,35W 47,5 OHM+-1%TK50 RESISTOR	RL 082.9507	DRALORIC	SMA0207/47,50HM-F-D	
R293	RL 0,35W 3,57KOHM+-1%TK50 RESISTOR	RL 083.1022	DRALORIC	SMA0207/3,57K-F-D	
R294	RL 0,35W 475 OHM+-1%TK50 RESISTOR	RL 083.0390	DRALORIC	SMA0207/4750HM-F-D	
R295	RL 0,35W 681 OHM+-1%TK50 RESISTOR	RL 083.0490	DRALORIC	SMA0207/6810HM-F-D	
R296	RL 0,35W 100 OHM+-1%TK50 METALFILM-RESISTOR	RL 082.6543	DRALORIC	SMA0207/100/HM-F-D	
R297	RL 0,35W 221 OHM+-1%TK50 RESISTOR	RL 083.0084	DRALORIC	SMA0207/2210HM-F-D	
R298	RL 0,35W 750 OHM+-1%TK50 RESISTOR	RL 082.2360	DRALORIC	SMA0207/7500HM-F-C	
R299	RL 0,35W 47,5 OHM+-1%TK50 RESISTOR	RL 082.9507	DRALORIC	SMA0207/47,50HM-F-D	
R302	RL 0,35W 4,75KOHM+-1%TK50 RESISTOR	RL 083.1097	DRALORIC	SMA0207/4,75K-F-D	
R303	RL 0,35W 301 OHM+-1%TK50 RESISTOR	RL 083.0210	DRALORIC	SMA0207/3010HM-F-D	
R305	RL 0,35W 47,5 OHM+-1%TK50 RESISTOR	RL 082.9507	DRALORIC	SMA0207/47,50HM-F-D	
R306	RL 0,35W 100 OHM+-1%TK50 METALFILM-RESISTOR	RL 082.6543	DRALORIC	SMA0207/100/HM-F-D	
R307	RL 0,35W 562 OHM+-1%TK50 RESISTOR	RL 083.0461	DRALORIC	SMA0207/5620HM-F-D	
R309	RL 0,35W 1,50KOHM+-1%TK50 RESISTOR	RL 083.0732	DRALORIC	SMA0207/1,50K-F-D	
R310	RL 0,35W 825 OHM+-1%TK50 RESISTOR	RL 082.2502	DRALORIC	SMA 0207/8250HM-F-C	
R311	RL 0,35W 562 OHM+-1%TK50 RESISTOR	RL 083.0461	DRALORIC	SMA0207/5620HM-F-D	
R314	RL 0,35W 750 OHM+-1%TK50 RESISTOR	RL 082.2360	DRALORIC	SMA0207/7500HM-F-C	
R315	RL 0,35W 3,57KOHM+-1%TK50 RESISTOR	RL 083.1022	DRALORIC	SMA0207/3,57K-F-D	
R316	RL 0,35W 475 OHM+-1%TK50 RESISTOR	RL 083.0390	DRALORIC	SMA0207/4750HM-F-D	
R317	RL 0,35W 681 OHM+-1%TK50 RESISTOR	RL 083.0490	DRALORIC	SMA0207/6810HM-F-D	
R318	RL 0,35W 100 OHM+-1%TK50 METALFILM-RESISTOR	RL 082.6543	DRALORIC	SMA0207/100/HM-F-D	
R319	RL 0,35W 68,1 OHM+-1%TK50 RESISTOR	RL 082.9636	DRALORIC	SMA0207/68,10HM-F-D	
R320	RL 0,35W 221 OHM+-1%TK50 RESISTOR	RL 083.0084	DRALORIC	SMA0207/2210HM-F-D	
R321	RL 0,35W 750 OHM+-1%TK50 RESISTOR	RL 082.2360	DRALORIC	SMA0207/7500HM-F-C	
R322	RL 0,35W 475 OHM+-1%TK50 RESISTOR	RL 083.0390	DRALORIC	SMA0207/4750HM-F-D	
R323	RL 0,35W 3,57KOHM+-1%TK50 RESISTOR	RL 083.1022	DRALORIC	SMA0207/3,57K-F-D	
R324	RL 0,35W 475 OHM+-1%TK50 RESISTOR	RL 083.0390	DRALORIC	SMA0207/4750HM-F-D	
R325	RL 0,35W 681 OHM+-1%TK50 RESISTOR	RL 083.0490	DRALORIC	SMA0207/6810HM-F-D	
R326	RL 0,35W 100 OHM+-1%TK50 METALFILM-RESISTOR	RL 082.6543	DRALORIC	SMA0207/100/HM-F-D	
R327	RL 0,35W 68,1 OHM+-1%TK50 RESISTOR	RL 082.9636	DRALORIC	SMA0207/68,10HM-F-D	
R328	RL 0,35W 221 OHM+-1%TK50 RESISTOR	RL 083.0084	DRALORIC	SMA0207/2210HM-F-D	
R329	RS 0,3W 20 OHM+-10%CERMET TRIMMING POTENTIOMETER	RS 006.9116	BECKMAN	67W 200HM 10%	
R330	RL 0,35W 47,5 OHM+-1%TK50 RESISTOR	RL 082.9507	DRALORIC	SMA0207/47,50HM-F-D	
R331	RL 0,35W 475 OHM+-1%TK50 RESISTOR	RL 083.0390	DRALORIC	SMA0207/4750HM-F-D	
R332	RL 0,35W 562 OHM+-1%TK50 RESISTOR	RL 083.0461	DRALORIC	SMA0207/5620HM-F-D	
R333	RL 0,35W 825 OHM+-1%TK50 RESISTOR	RL 082.2502	DRALORIC	SMA 0207/8250HM-F-C	
R335	RL 0,35W 1,50KOHM+-1%TK50 RESISTOR	RL 083.0732	DRALORIC	SMA0207/1,50K-F-D	
R338	RL 0,35W 1,50KOHM+-1%TK50 RESISTOR	RL 083.0732	DRALORIC	SMA0207/1,50K-F-D	

Für diese Unterlage behalten wir uns alle Rechte vor

Kennz. Comp.No.	Benennung Designation	Sachnummer Stock No.	Hersteller Manufacturer	Bezeichnung Designation	enthalten in contained in
R339	RL 0,35W 825 OHM+-1%TK50 RESISTOR	RL 082.2502	DRALORIC	SMA 0207/8250HM-F-C	
R342	RL 0,35W 10,0KOHM+-1%TK50 RESISTOR	RL 083.1297	DRALORIC	SMA0207/10K-F-D	
R343	RL 0,35W 47,5 OHM+-1%TK50 RESISTOR	RL 082.9507	DRALORIC	SMA0207/47,50HM-F-D	
R344	RL 0,35W 100 OHM+-1%TK50 METALFILM-RESISTOR	RL 082.6543	DRALORIC	SMA0207/100/HM-F-D	
R345	RL 0,35W 562 OHM+-1%TK50 RESISTOR	RL 083.0461	DRALORIC	SMA0207/5620HM-F-D	
R346	RL 0,35W 332 OHM+-1%TK50 RESISTOR	RL 083.0255	DRALORIC	SMA0207/3320HM-F-D	
R352	RL 0,35W 1,50KOHM+-1%TK50 RESISTOR	RL 083.0732	DRALORIC	SMA0207/1,50K-F-D	
R354	RL 0,35W 750 OHM+-1%TK50 RESISTOR	RL 082.2360	DRALORIC	SMA0207/7500HM-F-C	
R355	RL 0,35W 3,57KOHM+-1%TK50 RESISTOR	RL 083.1022	DRALORIC	SMA0207/3,57K-F-D	
R356	RL 0,35W 681 OHM+-1%TK50 RESISTOR	RL 083.0490	DRALORIC	SMA0207/6810HM-F-D	
R357	RL 0,35W 475 OHM+-1%TK50 RESISTOR	RL 083.0390	DRALORIC	SMA0207/4750HM-F-D	
R358	RL 0,35W 100 OHM+-1%TK50 METALFILM-RESISTOR	RL 082.6543	DRALORIC	SMA0207/100/HM-F-D	
R359	RL 0,35W 56,2 OHM+-1%TK50 RESISTOR	RL 082.9571	DRALORIC	SMA0207/56,20HM-F-D	
R360	RS 0,3W 20 OHM+-10%CERMET TRIMMING POTENTIOMETER	RS 006.9116	BECKMAN	67W 200HM 10%	
R361	RL 0,35W 221 OHM+-1%TK50 RESISTOR	RL 083.0084	DRALORIC	SMA0207/2210HM-F-D	
R363	RL 0,35W 475 OHM+-1%TK50 RESISTOR	RL 083.0390	DRALORIC	SMA0207/4750HM-F-D	
R365	RL 0,35W 1,50KOHM+-1%TK50 RESISTOR	RL 083.0732	DRALORIC	SMA0207/1,50K-F-D	
R366	RL 0,35W 825 OHM+-1%TK50 RESISTOR	RL 082.2502	DRALORIC	SMA 0207/8250HM-F-C	
R370	RL 0,35W 150 OHM+-1%TK50 RESISTOR	RL 082.9942	DRALORIC	SMA0207/1500HM-F-D	
R373	RL 0,35W 10,0KOHM+-1%TK50 RESISTOR	RL 083.1297	DRALORIC	SMA0207/10K-F-D	
R374	RL 0,35W 100 OHM+-1%TK50 METALFILM-RESISTOR	RL 082.6543	DRALORIC	SMA0207/100/HM-F-D	
T1	LU UEBERTRAGER TRANSFORMER	808.0113			
V1	AM J310 N-D 25V JFET FET	283.9031	SILICONIX	J310	
V2	AK BFR96S N 15V 100MA TRANSISTOR	644.0830	VALVO	BFR96S	
V3	AK 2N2907A P 60V 600MA TRANSISTOR	AK 010.3583	VALVO	2N2907A	
V4	AE 5082-2800 SCHOTTKY DIODE	AE 012.9066	HEWLETT-P.	5082-2800	
V5	AE 5082-2800 SCHOTTKY DIODE	AE 012.9066	HEWLETT-P.	5082-2800	
V6	AE BA244 BER.SCH.DI.UHF DIODE	AE 439.6310	INTERMETAL	BA244	
V8	AE BA244 BER.SCH.DI.UHF DIODE	AE 439.6310	INTERMETAL	BA244	
V9	AE BA244 BER.SCH.DI.UHF DIODE	AE 439.6310	INTERMETAL	BA244	
V16	AE BA244 BER.SCH.DI.UHF DIODE	AE 439.6310	INTERMETAL	BA244	
V17	AE BZX79/C3V9 0,5W ZDI ZENER DIODE	AE 086.8234	VALVO	BZX55/C3V9 BZX79...	
V37 ..41	AE BA244 BER.SCH.DI.UHF DIODE	AE 439.6310	INTERMETAL	BA244	
V42	AK 2N2369A N 15V 200MA TRANSISTOR	AK 010.4680	VALVO	2N2369A	
V46	AM J310 N-D 25V JFET FET	283.9031	SILICONIX	J310	
V47	AM J310 N-D 25V JFET FET	283.9031	SILICONIX	J310	
V48	AE 5082-2800 SCHOTTKY DIODE	AE 012.9066	HEWLETT-P.	5082-2800	
V49	AE 5082-2800 SCHOTTKY DIODE	AE 012.9066	HEWLETT-P.	5082-2800	

Für diese Unterlage behalten wir uns alle Rechte vor

Kennz. Comp.No.	Benennung Designation	Sachnummer Stock No.	Hersteller Manufacturer	Bezeichnung Designation	enthalten in contained in
V52	AK BF374 N 25V 100MA TRANSISTOR	377.3859	MOTOROLA	BF374	
V72	AE 1N827 6,2V REFDI REFERENCE DIODE	AE 418.0029	CDI	1N827	
V103	AD 1N4448 75V 0A15 UDI DIODE	AD 012.0700	TEXAS INST	1N4448 GEGURTET	
V107	AD 1N4448 75V 0A15 UDI DIODE	AD 012.0700	TEXAS INST	1N4448 GEGURTET	
V145	AK BFW16A N 40V 150MA TRANSISTOR	AK 010.4644	VALVO	BFW16A	
V251	AE BA244 BER.SCH.DI.UHF DIODE	AE 439.6310	INTERMETAL	BA244	
V254	AE BA244 BER.SCH.DI.UHF DIODE	AE 439.6310	INTERMETAL	BA244	
V257	AE BA244 BER.SCH.DI.UHF DIODE	AE 439.6310	INTERMETAL	BA244	
V260	AE BA244 BER.SCH.DI.UHF DIODE	AE 439.6310	INTERMETAL	BA244	
V265	AE BA244 BER.SCH.DI.UHF DIODE	AE 439.6310	INTERMETAL	BA244	
V270	AE BA244 BER.SCH.DI.UHF DIODE	AE 439.6310	INTERMETAL	BA244	
V275	AE BA244 BER.SCH.DI.UHF DIODE	AE 439.6310	INTERMETAL	BA244	
V280	AE BA244 BER.SCH.DI.UHF DIODE	AE 439.6310	INTERMETAL	BA244	
V291	AK BF374 N 25V 100MA TRANSISTOR	377.3859	MOTOROLA	BF374	
V292	AK BF374 N 25V 100MA TRANSISTOR	377.3859	MOTOROLA	BF374	
V299	AE QPND4154 50V PIN PINDIODE	805.5395	HEWLETT-P.	QPND4154	
V301	AK 2N3866 N 30V 400MA TRANSISTOR	AK 010.0926	VALVO	2N3866	
V307	AE BA244 BER.SCH.DI.UHF DIODE	AE 439.6310	INTERMETAL	BA244	
V308	AE BA244 BER.SCH.DI.UHF DIODE	AE 439.6310	INTERMETAL	BA244	
V309	AE BA244 BER.SCH.DI.UHF DIODE	AE 439.6310	INTERMETAL	BA244	
V311	AE BA244 BER.SCH.DI.UHF DIODE	AE 439.6310	INTERMETAL	BA244	
V315	AK BF374 N 25V 100MA TRANSISTOR	377.3859	MOTOROLA	BF374	
V316	AK BF374 N 25V 100MA TRANSISTOR	377.3859	MOTOROLA	BF374	
V321	AK 2N3866 N 30V 400MA TRANSISTOR	AK 010.0926	VALVO	2N3866	
V322	AK BF374 N 25V 100MA TRANSISTOR	377.3859	MOTOROLA	BF374	
V324	AK BF374 N 25V 100MA TRANSISTOR	377.3859	MOTOROLA	BF374	
V330	AK 2N3866 N 30V 400MA TRANSISTOR	AK 010.0926	VALVO	2N3866	
V332	AE BA244 BER.SCH.DI.UHF DIODE	AE 439.6310	INTERMETAL	BA244	
V335	AE BA244 BER.SCH.DI.UHF DIODE	AE 439.6310	INTERMETAL	BA244	
V336	AE BA244 BER.SCH.DI.UHF DIODE	AE 439.6310	INTERMETAL	BA244	
V337	AE BA244 BER.SCH.DI.UHF DIODE	AE 439.6310	INTERMETAL	BA244	
V338	AE BA244 BER.SCH.DI.UHF DIODE	AE 439.6310	INTERMETAL	BA244	
V350	AE BA244 BER.SCH.DI.UHF DIODE	AE 439.6310	INTERMETAL	BA244	
V351	AE BA244 BER.SCH.DI.UHF DIODE	AE 439.6310	INTERMETAL	BA244	
V355	AK BF374 N 25V 100MA TRANSISTOR	377.3859	MOTOROLA	BF374	
V356	AK BF374 N 25V 100MA TRANSISTOR	377.3859	MOTOROLA	BF374	
V362	AK 2N3866 N 30V 400MA TRANSISTOR	AK 010.0926	VALVO	2N3866	
V365	AE BA244 BER.SCH.DI.UHF DIODE	AE 439.6310	INTERMETAL	BA244	
V366	AE BA244 BER.SCH.DI.UHF DIODE	AE 439.6310	INTERMETAL	BA244	

Für diese Unterlage behalten wir uns alle Rechte vor

Kennz. Comp.No.	Benennung Designation	Sachnummer Stock No.	Hersteller Manufacturer	Bezeichnung Designation	enthalten in contained in
X3	FJ EINBAUWINKELST. SMC ANGLE CONNECTOR	FJ 249.9684	RADIALL	R 112 669	
X5	FJ EINBAUWINKELST. SMC ANGLE CONNECTOR	FJ 249.9684	RADIALL	R 112 669	
X35	FP INDIREKT.STECKERL.36P. PIN CONNECTOR	FP 242.3600	BINDER	742-5-11-0178-00-36	
X102	FP INDIREKT.STECKERL.36P. PIN CONNECTOR	FP 242.3600	BINDER	742-5-11-0178-00-36	
X110	FP KURZSCHLUSSBUCHSE SHORTING PLUG	FP 491.7042	PK	452-70302	
X112	FP KURZSCHLUSSBUCHSE SHORTING PLUG	FP 491.7042	PK	452-70302	
X130	FP KURZSCHLUSSBUCHSE SHORTING PLUG	FP 491.7042	PK	452-70302	
X135	FP KURZSCHLUSSBUCHSE SHORTING PLUG	FP 491.7042	PK	452-70302	
X150	FP KURZSCHLUSSBUCHSE SHORTING PLUG	FP 491.7042	PK	452-70302	
X160	FP KURZSCHLUSSBUCHSE SHORTING PLUG	FP 491.7042	PK	452-70302	
X170	FP KURZSCHLUSSBUCHSE SHORTING PLUG	FP 491.7042	PK	452-70302	
X290	FP INDIREKT.STECKERL.36P. PIN CONNECTOR	FP 242.3600	BINDER	742-5-11-0178-00-36	
X291	FP KURZSCHLUSSBUCHSE SHORTING PLUG	FP 491.7042	PK	452-70302	
X300	FP INDIREKT.STECKERL.36P. PIN CONNECTOR	FP 242.3600	BINDER	742-5-11-0178-00-36	
X322	FP INDIREKT.STECKERL.36P. PIN CONNECTOR	FP 242.3600	BINDER	742-5-11-0178-00-36	
X323	FP KURZSCHLUSSBUCHSE SHORTING PLUG	FP 491.7042	PK	452-70302	
X345	FP INDIREKT.STECKERL.36P. PIN CONNECTOR	FP 242.3600	BINDER	742-5-11-0178-00-36	
X346	FP KURZSCHLUSSBUCHSE SHORTING PLUG	FP 491.7042	PK	452-70302	
X370	FP INDIREKT.STECKERL.36P. PIN CONNECTOR	FP 242.3600	BINDER	742-5-11-0178-00-36	
X10A	VL WIRE-WRAP PIN WIRE-WRAP PIN	VL 088.4507	BERG	NR. 75 403-001	
X10B	VL WIRE-WRAP PIN WIRE-WRAP PIN	VL 088.4507	BERG	NR. 75 403-001	
X12A	VL WIRE-WRAP PIN WIRE-WRAP PIN	VL 088.4507	BERG	NR. 75 403-001	
X12B	VL WIRE-WRAP PIN WIRE-WRAP PIN	VL 088.4507	BERG	NR. 75 403-001	
X14A	VL WIRE-WRAP PIN WIRE-WRAP PIN	VL 088.4507	BERG	NR. 75 403-001	
X14B	VL WIRE-WRAP PIN WIRE-WRAP PIN	VL 088.4507	BERG	NR. 75 403-001	
X15A	VL WIRE-WRAP PIN WIRE-WRAP PIN	VL 088.4507	BERG	NR. 75 403-001	
X15B	VL WIRE-WRAP PIN WIRE-WRAP PIN	VL 088.4507	BERG	NR. 75 403-001	
X21A	FP IND.STECKERLEISTE 64 P MALE MULTIPOINT CONNECTOR	FP 273.0490	PANDUIT	100-964-033/999	
X30A	VL WIRE-WRAP PIN WIRE-WRAP PIN	VL 088.4507	BERG	NR. 75 403-001	
X30B	VL WIRE-WRAP PIN WIRE-WRAP PIN	VL 088.4507	BERG	NR. 75 403-001	
X33A	VL WIRE-WRAP PIN WIRE-WRAP PIN	VL 088.4507	BERG	NR. 75 403-001	
X33B	VL WIRE-WRAP PIN WIRE-WRAP PIN	VL 088.4507	BERG	NR. 75 403-001	
X34A	VL WIRE-WRAP PIN WIRE-WRAP PIN	VL 088.4507	BERG	NR. 75 403-001	
X34B	VL WIRE-WRAP PIN WIRE-WRAP PIN	VL 088.4507	BERG	NR. 75 403-001	
X60A	VL WIRE-WRAP PIN WIRE-WRAP PIN	VL 088.4507	BERG	NR. 75 403-001	
X60B	VL WIRE-WRAP PIN WIRE-WRAP PIN	VL 088.4507	BERG	NR. 75 403-001	
X90A	VL WIRE-WRAP PIN WIRE-WRAP PIN	VL 088.4507	BERG	NR. 75 403-001	
X90B	VL WIRE-WRAP PIN WIRE-WRAP PIN	VL 088.4507	BERG	NR. 75 403-001	
					- ENDE -

Für diese Unterlage behalten wir uns alle Rechte vor

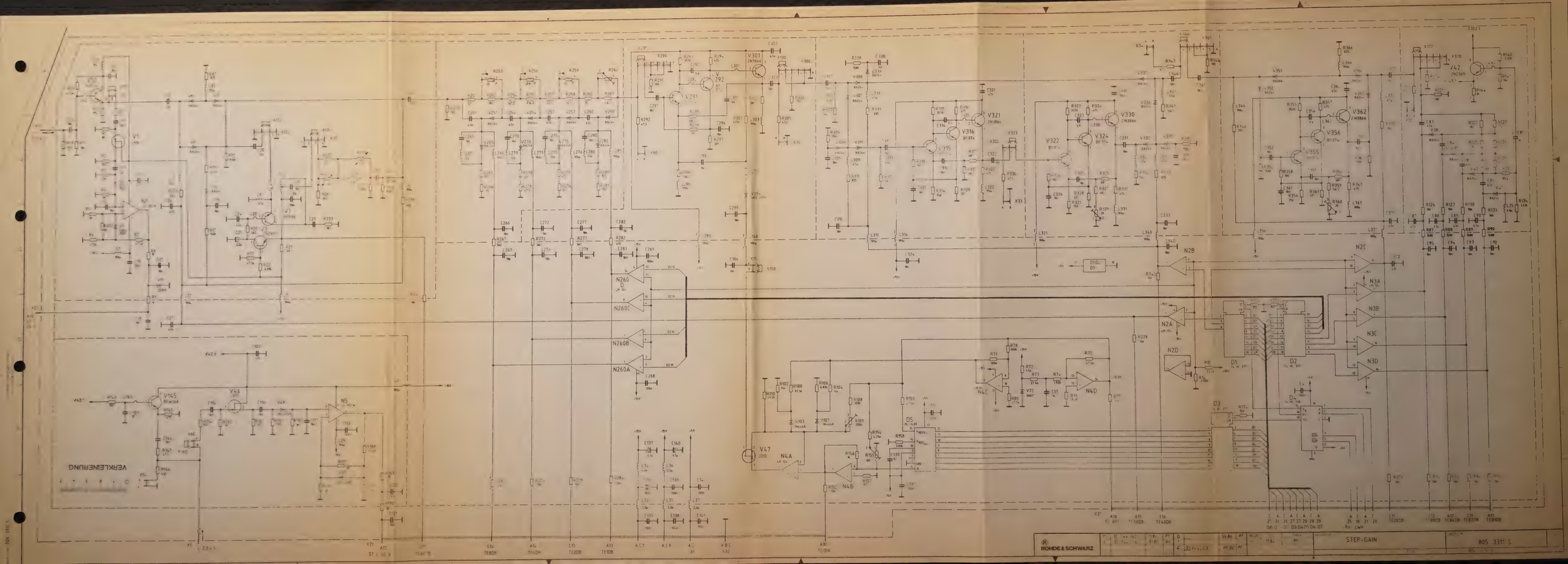
VERKLEIDERUNG
STEP-GAIN
805 331.5
ROHDE & SCHWARZ

Für diese Unterlage behalten wir uns alle Rechte vor

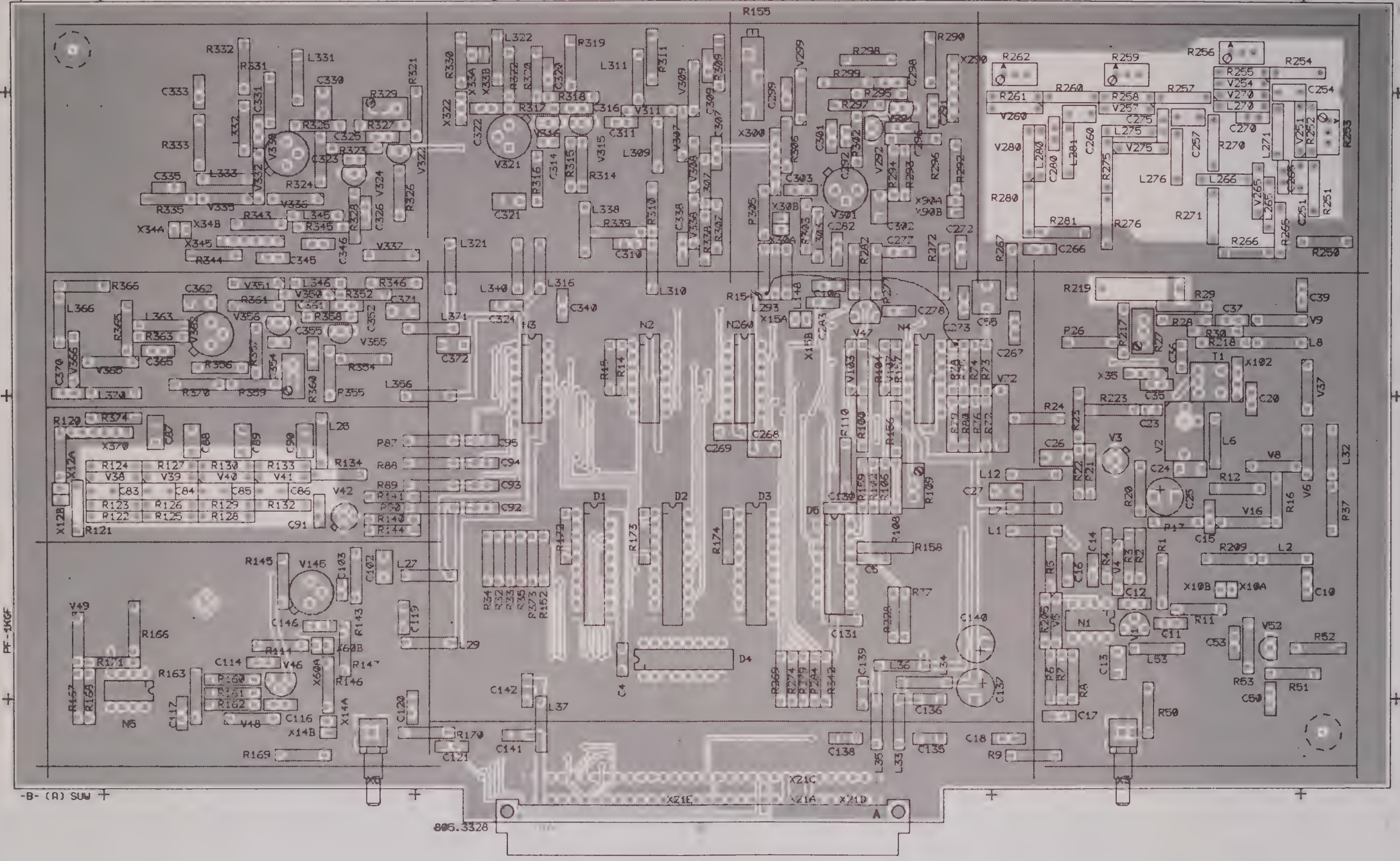

Ansicht und Leitungsführung Bauteilseite
View of tracks on component side

ACHTUNG EGB!
Elektrostatisch gefährdete Bauelemente erfordern eine besondere Handhabung
ATTENTION ESD!
Electrostatic sensitive devices require a special handling

VARIANTENERKLÄRUNG/VERSION
VAR 02 – GRUNDAUSFÜHRUNG/BASIC MODEL

And	Änderungs-Mitteilung	Tag	Name
B	– – –	06 86	PF
H	32 744 (62)	1186	Pf

Maße ohne Toleranzangabe

1KGF	Tag	Name
Bearb	06 86	PF
Gepr		
Norm		

ROHDE&SCHWARZ
zu Gerät FSA

Maßstab 1 : 1
Halbzeug, Werkstoff
Benennung: STEP GAIN
Z
Zeichn.-Nr. 805.3311.01 EE
Blatt-Nr. 2 v Bl
reg. i. V. 804.9516 V
erste Z. 804.9516

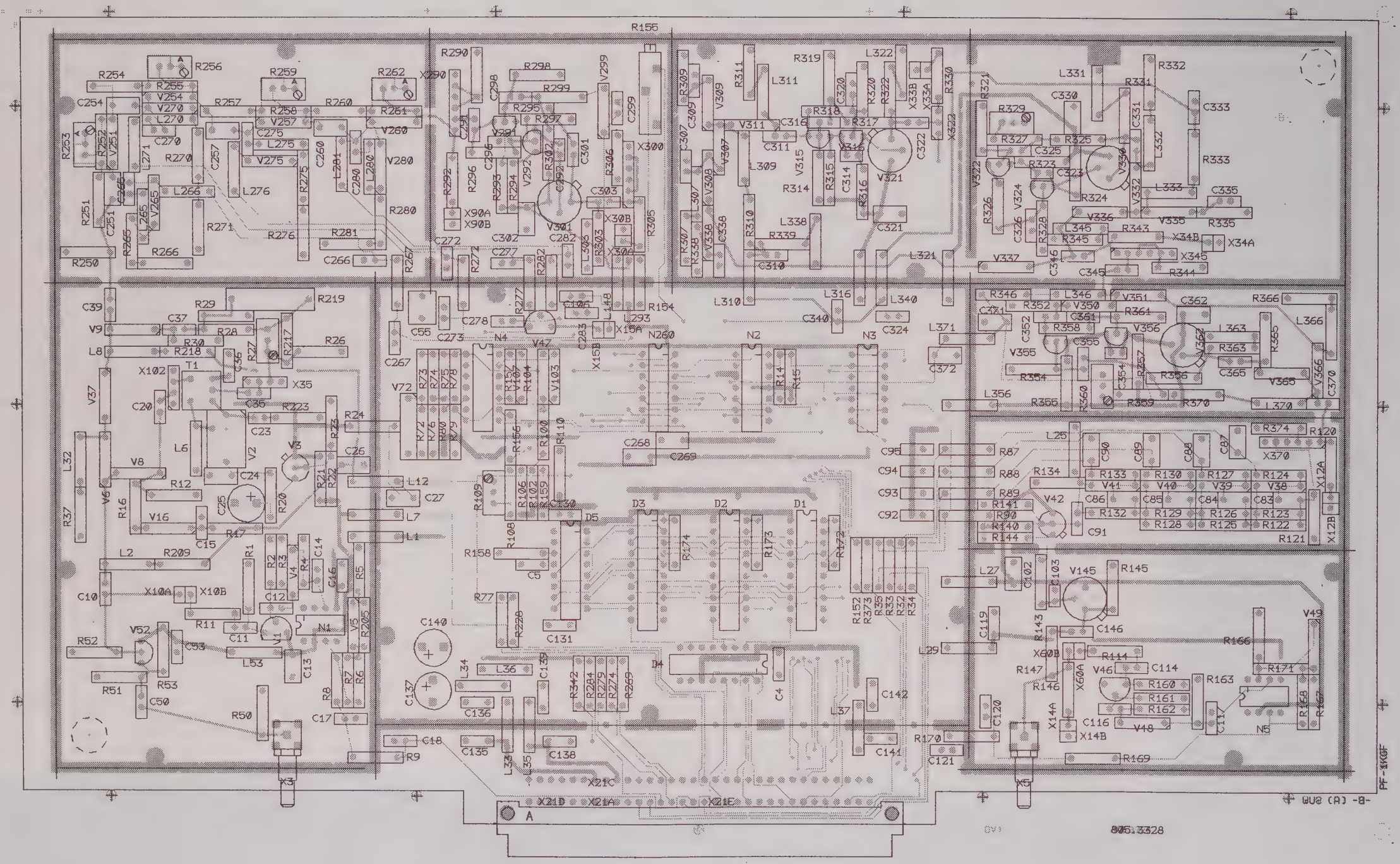

Ansicht und Leitungsführung Lötseite
View of tracks on solder side

(herzu HVC 250)

ACHTUNG. EGB!
Elektrostatisch gefährdete Bauelemente erfordern eine besondere Handhabung
ATTENTION ESD!
Electrostatic sensitive devices require a special handling

VARIANTENERKLÄRUNG/VERSION
VAR 02 – GRUNDAUSFÜHRUNG/BASIC MODEL

Änd. Zust.	Änderungs-Mitteilung	Tag	Name
B	– – –	06.86	PF
H	32 744 (62)	11.86	Pf

Maße ohne Toleranzangabe

Maßstab 1 : 1

Halbzeug, Werkstoff

1KGF	Tag	Name
Bearb.	06.86	PF
Gepr.		
Norm		

Benennung: STEP GAIN

Z

ROHDE&SCHWARZ

zu Gerät FSA

Zeichn.-Nr 805.3311.01 EE

Blatt-Nr 3 v Bl.

reg. i. V. 804.9516 V

erste Z. 804.9516

Für diese Unterlage behalten wir uns alle Rechte vor.

ROHDE&SCHWARZ

SERVICE DOCUMENTATION

Lin/Log

805.2315.02

Contents

		Page
6	**Service Instructions Lin/Log**	6.1
6.1	**Function Description**	6.1
6.1.1	Logarithmic Amplifier and Rectifier	6.1
6.1.2	Linear Amplifier and Rectifier	6.2
6.1.3	Video Amplifier	6.2
6.1.4	Temperature Compensation	6.2
6.1.5	Buffer Amplifier	6.2
6.1.6	Control	6.2
6.2	**Testing and Adjustment**	6.5
6.2.1	Testing the Power Supply and Auxiliary Voltages	6.5
6.2.2	Adjusting the Logarithmic Amplifier	6.5
6.2.3	Final Adjustment	6.6
6.3	**Troubleshooting**	6.7
6.3.1	Logarithmic Amplifier	6.7
6.3.2	Linear Rectifier	6.7

Parts lists
Circuit diagrams
Component location plans

6 Service Instructions Lin/Log

(See circuit diagram 805.2315 S)

6.1 Function Description

The lin/log module is responsible for the linear and logarithmic rectification of the 21.4-MHz signal from the IF filter.

It contains the following function groups (see also Fig. 6-3):

- A 13-step logarithmic amplifier (LV1 to LV13).
- A linear amplifier SV1/SV2 switchable in 10-dB steps with linear rectifier GL.
- Video signal selector VS and video signal amplifier VV.
- Temperature compensation TK.
- Buffer amplifiers P1 and P2.
- Control S.

6.1.1 Logarithmic Amplifier and Rectifier

a) Functional principle

The output voltage of a logarithmic amplifier is to be proportional to the logarithm of the input voltage (Fig. 6-1).

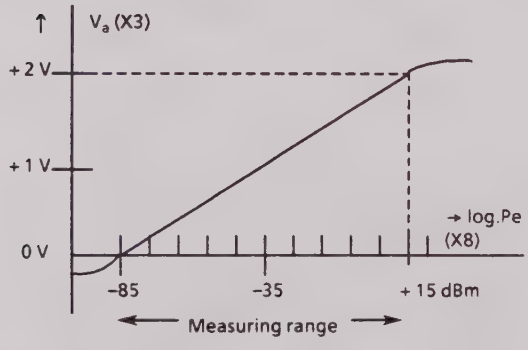

Fig. 6-1

As can be seen in Fig. 6-2, the straight line shown in Fig. 6-1 can be approximated in steps by the response of a differential amplifier.

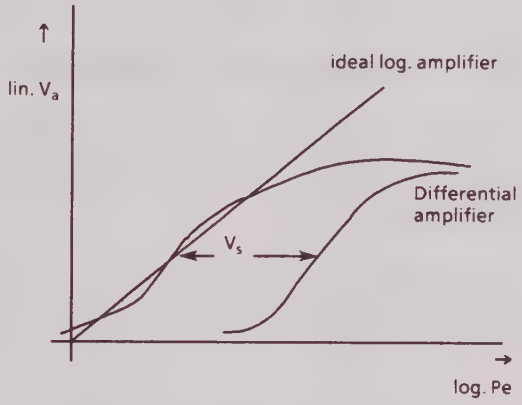

Fig. 6-2

The ideal straight line shown in Fig. 6-1 can be well approximated over a large input level range, in this case from -85 dBm to +15 dBm, if several amplifiers of this type with a step attenuation V_S are connected in series and their output voltages added in parallel.

b) Circuit design

The input signal at X8 is applied via the limiting and isolating amplifier TV (V500, V501, V505) to the first differential amplifier consisting of V10A to C.

V10E forms a rectifier for the positive half-wave whose output current is added to that of all other rectifiers in V280 and V286 or in R284. V10D delivers the base bias for the rectifier V10E via L21.

To prevent the differential amplifier LV10 from already being limited by the noise of the input stage, a bandpass filter is inserted into the centre of the gain response whose bandwidth is changed depending on the set IF bandwidth using the PIN diode V111.

The stages LV11 to LV13 extend the logarithmic range to higher levels by dividing down its input signal via R561 or R571.

In order to improve the logarithmic linearity, the stages LV1, LV2, LV11 to LV13 have a somewhat smaller gain (7 dB) than the other stages (9.5 dB).

The logarithmic, rectified signal produced at R284 is applied to the video amplifier VV via the lowpass TP1 and the video signal selector VS (V300).

A 21.4 MHz signal of constant amplitude is available at the output of amplifier LV10 (V600A to C) at X1 and X2.

6.1.2 Linear Amplifier and Rectifier

The input signal at X8 is applied to a linear rectifier GL (V390, V394, V391, V392) via two switchable amplifiers SV1 (V330, V331, V341) and SV2 (V350, V351, V354).

The complete gain of SV1 and SV2 is 0 dB to +40 dB in 10-dB steps where SV1 can be switched to 0 dB or +20 dB and SV2 to 0 dB, +10 dB or +20 dB.

The rectified signal at R402 is applied to the video amplifier VV via the lowpass TP2 and the video signal selector VS (V300, V704).

The IF signal is decoupled to X4 via V593.

6.1.3 Video Amplifier

An inverting operational amplifier with a large bandwidth is produced by combining a DC amplifier (N710) with an RF amplifier (V714, V713 and V718).

V720 and R720 are connected in mode "Linear rectifier" with V300B into the negative feedback and improve the rectifier linearity.

6.1.4 Temperature Compensation

Control voltages are generated from a reference voltage (V374, N30B) and a thermal voltage (V730) by means of N730 and N750 and associated connections in order to compensate the temperature influence on the logarithmic amplifier and on the quality of coil L120 in the bandpass filter.

6.1.5 Buffer Amplifier

The amplifiers comprising V420, V421 and V430, V431 are used to decouple the modules connected to X5 and X6 and the input of the logarithmic amplifier. Their gain is ≈ 0.8 to 1.

6.1.6 Control

The switchover linear/logarithmic, setting of the linear amplifier and the bandwidth of the filter in the logarithmic amplifier are controlled by the microprocessor via latch D3.

A control command is read in with the pulse sequence as in the following diagram.

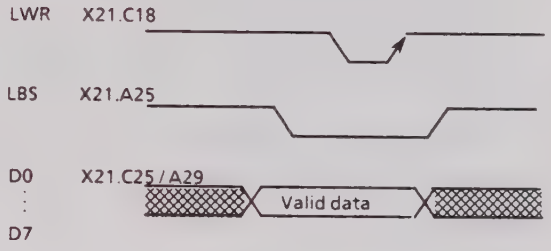

Table 6-1 lists the required setting commands.

Table 6-1

Operating mode	Data							
	DØ	D1	D2	D3	D4	D5	D6	D7
LIN	1	–	–	–	–	–	–	–
LOG	Ø	–	–	–	–	–	–	–
Filter								
Wide	–	1	–	–	–	–	–	–
Narrow	–	Ø	–	–	–	–	–	–
Linear amplifier gain								
0 dB	–	–	Ø	Ø	Ø	–	–	–
10 dB	–	–	Ø	Ø	1	–	–	–
20 dB	–	–	1	Ø	Ø	–	–	–
30 dB	–	–	1	Ø	1	–	–	–
40 dB	–	–	1	1	Ø	–	–	–

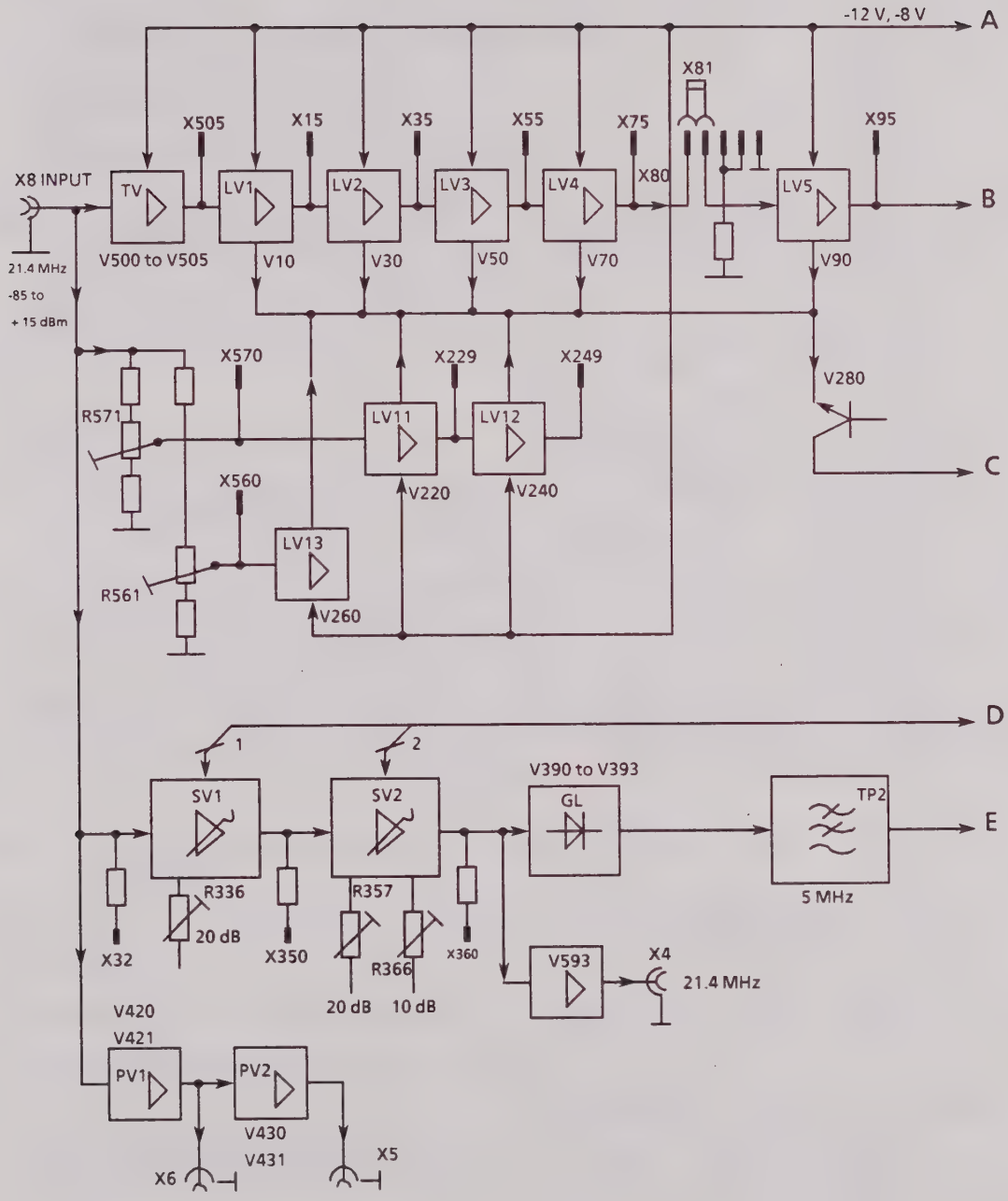

Fig. 6-3 Block diagram of lin/log module (part 1)

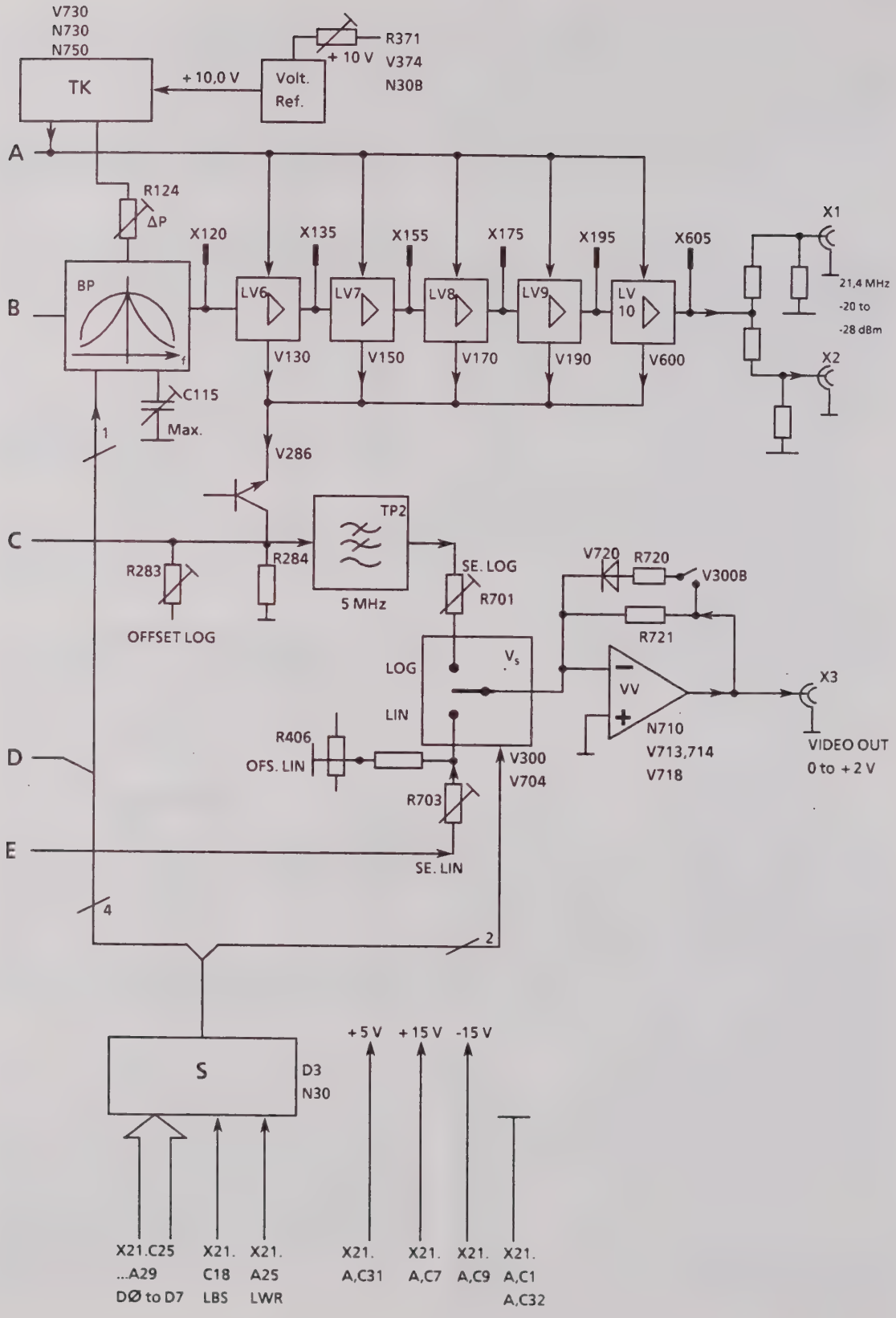

Fig. 6-3 Block diagram of lin/log module (part 2)

6.2 Testing and Adjustment

Equipment required

- Signal generator 21.4 MHz; –85 to + 15 dBm, e.g. **SMK**
- Digital voltmeter (DVM), e.g. **UDS5**
- AC voltmeter (Xs = 1 MΩ), e.g. **URE**
- Divider 10:1, e.g. **BOL-Z1**

6.2.1 Testing the Power Supply and Auxiliary Voltages

Check the voltages according to Table 6-2 using a DVM at an ambient temperature of + 20 to + 30 °C.

Table 6-2

Test point	Measured value
X36.B2	Adjust + 10 V ± 20 mV using R371
X73.A3	0 V ± 0.3 V
X73.B1	–7 V ± 0.3 V
X73.B2	–7.8 V ± 0.2 V
X73.B3	–12 V ± 0.2 V

6.2.2 Adjusting the Logarithmic Amplifier

- All measurements with AC voltmeter and 10:1 divider.
- Module cover must be fitted on printed side.
- Connect signal generator to X8 (0 dBm, 21.4 MHz).
- Connect divider to X249; adjust measured value of 45 mV ± 5 mV using R571.
- Store measured value; display in ΔdB.
- Connect divider to X229; measured value –7 ± 0.25 dB.
- Connect divider to X505; measured value 43 mV ± 5 mV; store measured value; display in ΔdB.
- Adjust stages V10 to V90 and V220, V240 and V260 according to Table 6-3.

Table 6-3

Signal generator level (dBm)	Test point	Measured value (ΔdB)	Control
–7	X15	0 ± 0.02 dB	R9
–14	X35	0 ± 0.02 dB	R46
–23.5	X55	0 ± 0.02 dB	R66
–33	X75	0 ± 0.02 dB	R86
–42.5	X95	0 ± 0.02 dB	R106
+ 14	X570	0 ± 0.02 dB	R571
+ 7	X229	0 ± 0.02 dB	R221
+ 11.5	X560	0 ± 0.02 dB	R561

- Plug X81 onto X80.2-3 and connect signal generator to X80.4,5 (21.4 MHz, -5 dBm). Cover bandpass filter chamber using metal strips.
- Switch filter to "wide".
- Connect divider to X95; measured value 55 ± 5 mV; store measured value; display in ΔdB.
- Adjust stages V130 to V600 according to Table 6-4.

Table 6-4

Signal generator level (dBm)	Test point	Measured value (ΔdB)	Control
–14.5	X135	0 ± 0.02 dB	R146
–24	X155	0 ± 0.02 dB	R166
–33.5	X175	0 ± 0.02 dB	R186
–43	X195	0 ± 0.02 dB	R205
–52.5	X605	0 ± 0.02 dB	R602

- Disconnect signal generator from X80 and connector X81 onto X80.1-2.

6.2.3 Final Adjustment

- Both covers fitted; connect DVM to X3.

Table 6-5

Input signal 21.4 MHz at X8	Operating mode	Test point	Measured value	Control
a) –45 dBm	Log. filter narrow	X3	• DC at maximum • At same value as with filter wide	C115 R124
b) +15 dBm	Log. filter wide + filter narrow	X3	DC +2 V ±1 mV	R701
		X1; X2	21.4 MHz; –22 ±2 dBm	
		X5; X6	110 mV_{rms} ±10 % (with divider 10:1)	
c) –85 dBm	Log. filter narrow	X3	DC 0 V ±2 mV	R283
		X1; X2	21.4 MHz; –26 ±2 dBm	
d) +15 dBm –25 dBm	Lin. gain 0 dB	X3	DC +2 V ±1 mV	R703
			DC 20 mV ±0 1 mV	R406
e) +5 dBm –5 dBm –25 dBm	Lin. gain +10 dB Gain +20 dB Gain +40 dB	X3	DC +2 V ±1 mV	R366 R336 R357
		X4	45 mV_{rms} ±5 mV (with divider 10:1)	
f) –85 dBm to +15 dBm	Log. filter narrow	X3	DC 0 to +2 V 20 mV/dB ±2 mV 200 mV/10 dB ±10 mV	
g) –25 dBm to +15 dBm	Lin. gain 0 dB	X3	DC +0.02 to +2 V Linearity ±3 %	

Note on *f)*:

The logarithmic linearity can be measured exactly using a computer-controlled test setup comprising the following instruments:

PUC, PUD, SMK, DPSP, UDS5.

6.3 Troubleshooting

6.3.1 Logarithmic Amplifier

Larger errors in measurement in range 90 to 100 dB below the full-scale value with otherwise correct results.

- Check driving of bandpass filter (D3, N30, V111).

Larger errors in measurement in range from full-scale value to -45 dB below full-scale.

- Check bandpass filter and adjust if necessary.

Larger linearity errors in range from full-scale value to -20 dB below full-scale.

- Check voltage divider at R71 or R561 and adjust if necessary.
- Check amplifier stages V200, V240 and V260 and adjust if necessary.

General

With +15 dBm/21.4 MHz at X8,a squarewave signal of approx. 200 mV_{pp} should be detected at all logarithmic amplifier outputs (e.g. X15) except V220 and V260 (divider 10:1 in series with 1 pF).

A triangular signal with 250 to 300 mV_{pp} is then present at all rectifier outputs (e.g. X11) (divider 10:1); (except V220 and V260).

6.3.2 Linear Rectifier

Linearity error in range from full-scale value to –10 dB below full-scale.

- Check V720, R720, V300.

Linearity error in range -30 to -40 dB below full-scale value.

- V393, L391, V391, V392.

ROHDE & SCHWARZ

Schaltteillisten
Stromläufe
Bestückungspläne

Part lists
Circuit diagrams
Components plans

Listes des pièces détachées
Schémas de Circuit
Plans des composants

(R 29500 Bl. 2)
895.1008 Bl. 2

Kennz. Comp.No.	Benennung Designation	Sachnummer Stock No.	Hersteller Manufacturer	Bezeichnung Designation	enthalten in contained in
.	ZUGEH.STROML./CIRC.DIAGR. 805.2315 S				
C1	CC 18PF+-2%3X4NPO CAPACITOR	CC 087.6458	VALVO	2222 678 10189	
C3	CC 10NF-20+50%7X8R4000 CAPACITOR	CC 087.7525	VALVO	2222 63051 64051103	
C11	CC 12PF+-2%3X4NPO CAPACITOR	CC 087.6435	VALVO	2222 678 10129	
C12	CC 10NF-20+50%7X8R4000 CAPACITOR	CC 087.7525	VALVO	2222 63051 64051103	
C13	CK 47NF+-5%63V5RM MKT CAPACITOR	CK 099.2917	WIMA	MKS2/63/0,047UF/5%	
C14	CC 10NF-20+50%7X8R4000 CAPACITOR	CC 087.7525	VALVO	2222 63051 64051103	
C15	CC 10NF-20+50%7X8R4000 CAPACITOR	CC 087.7525	VALVO	2222 63051 64051103	
C16	CC 68PF+-2%6X7NPO CAPACITOR	CC 087.6529	VALVO	2222 678 10689	
C17	CK 47NF+-5%63V5RM MKT CAPACITOR	CK 099.2917	WIMA	MKS2/63/0,047UF/5%	
C23	CK 47NF+-5%63V5RM MKT CAPACITOR	CK 099.2917	WIMA	MKS2/63/0,047UF/5%	
C30	CC 12PF+-2%3X4NPO CAPACITOR	CC 087.6435	VALVO	2222 678 10129	
C31	CC 10NF-20+50%7X8R4000 CAPACITOR	CC 087.7525	VALVO	2222 63051 64051103	
C32	CC 10NF-20+50%7X8R4000 CAPACITOR	CC 087.7525	VALVO	2222 63051 64051103	
C33	CK 47NF+-5%63V5RM MKT CAPACITOR	CK 099.2917	WIMA	MKS2/63/0,047UF/5%	
C34	CC 10NF-20+50%7X8R4000 CAPACITOR	CC 087.7525	VALVO	2222 63051 64051103	
C35	CC 10NF-20+50%7X8R4000 CAPACITOR	CC 087.7525	VALVO	2222 63051 64051103	
C36	CC 68PF+-2%6X7NPO CAPACITOR	CC 087.6529	VALVO	2222 678 10689	
C37	CK 47NF+-5%63V5RM MKT CAPACITOR	CK 099.2917	WIMA	MKS2/63/0,047UF/5%	
C38	CK 47NF+-5%63V5RM MKT CAPACITOR	CK 099.2917	WIMA	MKS2/63/0,047UF/5%	
C39	CK 47NF+-5%63V5RM MKT CAPACITOR	CK 099.2917	WIMA	MKS2/63/0,047UF/5%	
C51	CC 15PF+-2%3X4NPO CAPACITOR	CC 087.6441	VALVO	2222 678 10159	
C52	CC 10NF-20+50%7X8R4000 CAPACITOR	CC 087.7525	VALVO	2222 63051 64051103	
C53	CK 47NF+-5%63V5RM MKT CAPACITOR	CK 099.2917	WIMA	MKS2/63/0,047UF/5%	
C54	CC 10NF-20+50%7X8R4000 CAPACITOR	CC 087.7525	VALVO	2222 63051 64051103	
C55	CC 10NF-20+50%7X8R4000 CAPACITOR	CC 087.7525	VALVO	2222 63051 64051103	
C56	CC 68PF+-2%6X7NPO CAPACITOR	CC 087.6529	VALVO	2222 678 10689	
C57	CK 47NF+-5%63V5RM MKT CAPACITOR	CK 099.2917	WIMA	MKS2/63/0,047UF/5%	
C63	CK 47NF+-5%63V5RM MKT CAPACITOR	CK 099.2917	WIMA	MKS2/63/0,047UF/5%	
C71	CC 15PF+-2%3X4NPO CAPACITOR	CC 087.6441	VALVO	2222 678 10159	
C72	CC 10NF-20+50%7X8R4000 CAPACITOR	CC 087.7525	VALVO	2222 63051 64051103	
C73	CC 10NF-20+50%7X8R4000 CAPACITOR	CC 087.7525	VALVO	2222 63051 64051103	
C74	CK 47NF+-5%63V5RM MKT CAPACITOR	CK 099.2917	WIMA	MKS2/63/0,047UF/5%	
C75	CC 10NF-20+50%7X8R4000 CAPACITOR	CC 087.7525	VALVO	2222 63051 64051103	
C76	CC 68PF+-2%6X7NPO CAPACITOR	CC 087.6529	VALVO	2222 678 10689	
C77	CK 47NF+-5%63V5RM MKT CAPACITOR	CK 099.2917	WIMA	MKS2/63/0,047UF/5%	
C83	CK 47NF+-5%63V5RM MKT CAPACITOR	CK 099.2917	WIMA	MKS2/63/0,047UF/5%	
C91	CC 15PF+-2%3X4NPO CAPACITOR	CC 087.6441	VALVO	2222 678 10159	

Für diese Unterlage behalten wir uns alle Rechte vor

Kennz. Comp.No.	Benennung Designation	Sachnummer Stock No.	Hersteller Manufacturer	Bezeichnung Designation	enthalten in contained in
C92	CC 10NF-20+50%7X8R4000 CAPACITOR	CC 087.7525	VALVO	2222 63051 64051103	
C93	CK 47NF+-5%63V5RM MKT CAPACITOR	CK 099.2917	WIMA	MKS2/63/0,047UF/5%	
C94	CC 10NF-20+50%7X8R4000 CAPACITOR	CC 087.7525	VALVO	2222 63051 64051103	
C95	CK 47NF+-5%63V5RM MKT CAPACITOR	CK 099.2917	WIMA	MKS2/63/0,047UF/5%	
C96	CC 68PF+-2%6X7NP0 CAPACITOR	CC 087.6529	VALVO	2222 678 10689	
C97	CK 47NF+-5%63V5RM MKT CAPACITOR	CK 099.2917	WIMA	MKS2/63/0,047UF/5%	
C98	CK 47NF+-5%63V5RM MKT CAPACITOR	CK 099.2917	WIMA	MKS2/63/0,047UF/5%	
C99	CK 47NF+-5%63V5RM MKT CAPACITOR	CK 099.2917	WIMA	MKS2/63/0,047UF/5%	
C111	CC 1,5NF+-10%4X5R2000 CAPACITOR	CC 087.7048	VALVO	2222 63051 152	
C112	CC 10NF-20+50%7X8R4000 CAPACITOR	CC 087.7525	VALVO	2222 63051 64051103	
C113	CC 10NF-20+50%7X8R4000 CAPACITOR	CC 087.7525	VALVO	2222 63051 64051103	
C114	CC 10NF-20+50%7X8R4000 CAPACITOR	CC 087.7525	VALVO	2222 63051 64051103	
C115	CT 15,5PF N 750 RD7XH7 DISC TRIMMER	CT 037.9547	STETTNER	7STRIKO134,5/20	
C116	CG 100PF+-2PF250VTKE MICA CAPACITOR	CG 023.1503	JAHRE	53-1/100PF/2PF/250	
C117	CC 10PF+-0,25PF5X6P100 CAPACITOR	CC 087.6293	VALVO	2222 678 03109	
C118	CC 10NF-20+50%7X8R4000 CAPACITOR	CC 087.7525	VALVO	2222 63051 64051103	
C119	CC 8,2PF+-0,25PF3X4NP0 CAPACITOR	CC 087.6412	VALVO	2222 678 09828	
C120	CC 10NF-20+50%7X8R4000 CAPACITOR	CC 087.7525	VALVO	2222 63051 64051103	
C121	CC 10NF-20+50%7X8R4000 CAPACITOR	CC 087.7525	VALVO	2222 63051 64051103	
C122	CC 10NF-20+50%7X8R4000 CAPACITOR	CC 087.7525	VALVO	2222 63051 64051103	
C123	CK 47NF+-5%63V5RM MKT CAPACITOR	CK 099.2917	WIMA	MKS2/63/0,047UF/5%	
C124	CC 4,7PF+-0,25PF3X4NP0 CAPACITOR	CC 087.6387	VALVO	2222 678 09478	
C125	CC 10NF-20+50%7X8R4000 CAPACITOR	CC 087.7525	VALVO	2222 63051 64051103	
C131	CC 15PF+-2%3X4NP0 CAPACITOR	CC 087.6441	VALVO	2222 678 10159	
C132	CC 10NF-20+50%7X8R4000 CAPACITOR	CC 087.7525	VALVO	2222 63051 64051103	
C133	CK 47NF+-5%63V5RM MKT CAPACITOR	CK 099.2917	WIMA	MKS2/63/0,047UF/5%	
C134	CC 10NF-20+50%7X8R4000 CAPACITOR	CC 087.7525	VALVO	2222 63051 64051103	
C135	CC 68PF+-2%6X7NP0 CAPACITOR	CC 087.6529	VALVO	2222 678 10689	
C136	CK 47NF+-5%63V5RM MKT CAPACITOR	CK 099.2917	WIMA	MKS2/63/0,047UF/5%	
C137	CC 10NF-20+50%7X8R4000 CAPACITOR	CC 087.7525	VALVO	2222 63051 64051103	
C144	CK 47NF+-5%63V5RM MKT CAPACITOR	CK 099.2917	WIMA	MKS2/63/0,047UF/5%	
C151	CC 15PF+-2%3X4NP0 CAPACITOR	CC 087.6441	VALVO	2222 678 10159	
C152	CC 10NF-20+50%7X8R4000 CAPACITOR	CC 087.7525	VALVO	2222 63051 64051103	
C153	CK 47NF+-5%63V5RM MKT CAPACITOR	CK 099.2917	WIMA	MKS2/63/0,047UF/5%	
C154	CK 47NF+-5%63V5RM MKT CAPACITOR	CK 099.2917	WIMA	MKS2/63/0,047UF/5%	
C155	CK 47NF+-5%63V5RM MKT CAPACITOR	CK 099.2917	WIMA	MKS2/63/0,047UF/5%	
C156	CC 10NF-20+50%7X8R4000 CAPACITOR	CC 087.7525	VALVO	2222 63051 64051103	
C157	CC 10NF-20+50%7X8R4000 CAPACITOR	CC 087.7525	VALVO	2222 63051 64051103	
C158	CC 68PF+-2%6X7NP0 CAPACITOR	CC 087.6529	VALVO	2222 678 10689	

Für diese Unterlage behalten wir uns alle Rechte vor

Kennz. Comp.No.	Benennung Designation	Sachnummer Stock No.	Hersteller Manufacturer	Bezeichnung Designation	enthalten in contained in
C159	CK 47NF+-5%63V5RM MKT CAPACITOR	CK 099.2917	WIMA	MKS2/63/0,047UF/5%	
C163	CK 47NF+-5%63V5RM MKT CAPACITOR	CK 099.2917	WIMA	MKS2/63/0,047UF/5%	
C171	CC 15PF+-2%3X4NPO CAPACITOR	CC 087.6441	VALVO	2222 678 10159	
C172	CC 10NF-20+50%7X8R4000 CAPACITOR	CC 087.7525	VALVO	2222 63051 64051103	
C173	CK 47NF+-5%63V5RM MKT CAPACITOR	CK 099.2917	WIMA	MKS2/63/0,047UF/5%	
C174	CC 10NF-20+50%7X8R4000 CAPACITOR	CC 087.7525	VALVO	2222 63051 64051103	
C175	CC 10NF-20+50%7X8R4000 CAPACITOR	CC 087.7525	VALVO	2222 63051 64051103	
C176	CC 68PF+-2%6X7NPO CAPACITOR	CC 087.6529	VALVO	2222 678 10689	
C177	CK 47NF+-5%63V5RM MKT CAPACITOR	CK 099.2917	WIMA	MKS2/63/0,047UF/5%	
C185	CK 47NF+-5%63V5RM MKT CAPACITOR	CK 099.2917	WIMA	MKS2/63/0,047UF/5%	
C191	CC 15PF+-2%3X4NPO CAPACITOR	CC 087.6441	VALVO	2222 678 10159	
C192	CC 10NF-20+50%7X8R4000 CAPACITOR	CC 087.7525	VALVO	2222 63051 64051103	
C193	CK 47NF+-5%63V5RM MKT CAPACITOR	CK 099.2917	WIMA	MKS2/63/0,047UF/5%	
C194	CC 10NF-20+50%7X8R4000 CAPACITOR	CC 087.7525	VALVO	2222 63051 64051103	
C195	CC 68PF+-2%6X7NPO CAPACITOR	CC 087.6529	VALVO	2222 678 10689	
C196	CK 47NF+-5%63V5RM MKT CAPACITOR	CK 099.2917	WIMA	MKS2/63/0,047UF/5%	
C204	CK 47NF+-5%63V5RM MKT CAPACITOR	CK 099.2917	WIMA	MKS2/63/0,047UF/5%	
C220	CC 10NF-20+50%7X8R4000 CAPACITOR	CC 087.7525	VALVO	2222 63051 64051103	
C221	CC 12PF+-2%3X4NPO CAPACITOR	CC 087.6435	VALVO	2222 678 10129	
C222	CC 10NF-20+50%7X8R4000 CAPACITOR	CC 087.7525	VALVO	2222 63051 64051103	
C223	CK 47NF+-5%63V5RM MKT CAPACITOR	CK 099.2917	WIMA	MKS2/63/0,047UF/5%	
C224	CC 10NF-20+50%7X8R4000 CAPACITOR	CC 087.7525	VALVO	2222 63051 64051103	
C225	CC 68PF+-2%6X7NPO CAPACITOR	CC 087.6529	VALVO	2222 678 10689	
C226	CK 47NF+-5%63V5RM MKT CAPACITOR	CK 099.2917	WIMA	MKS2/63/0,047UF/5%	
C234	CK 47NF+-5%63V5RM MKT CAPACITOR	CK 099.2917	WIMA	MKS2/63/0,047UF/5%	
C240	CC 10NF-20+50%7X8R4000 CAPACITOR	CC 087.7525	VALVO	2222 63051 64051103	
C241	CC 12PF+-2%3X4NPO CAPACITOR	CC 087.6435	VALVO	2222 678 10129	
C242	CC 10NF-20+50%7X8R4000 CAPACITOR	CC 087.7525	VALVO	2222 63051 64051103	
C243	CK 47NF+-5%63V5RM MKT CAPACITOR	CK 099.2917	WIMA	MKS2/63/0,047UF/5%	
C244	CK 47NF+-5%63V5RM MKT CAPACITOR	CK 099.2917	WIMA	MKS2/63/0,047UF/5%	
C245	CC 10NF-20+50%7X8R4000 CAPACITOR	CC 087.7525	VALVO	2222 63051 64051103	
C246	CC 68PF+-2%6X7NPO CAPACITOR	CC 087.6529	VALVO	2222 678 10689	
C247	CK 47NF+-5%63V5RM MKT CAPACITOR	CK 099.2917	WIMA	MKS2/63/0,047UF/5%	
C248	CC 10NF-20+50%7X8R4000 CAPACITOR	CC 087.7525	VALVO	2222 63051 64051103	
C249	CK 47NF+-5%63V5RM MKT CAPACITOR	CK 099.2917	WIMA	MKS2/63/0,047UF/5%	
C255	CK 47NF+-5%63V5RM MKT CAPACITOR	CK 099.2917	WIMA	MKS2/63/0,047UF/5%	
C260	CC 10NF-20+50%7X8R4000 CAPACITOR	CC 087.7525	VALVO	2222 63051 64051103	
C261	CC 68PF+-2%6X7NPO CAPACITOR	CC 087.6529	VALVO	2222 678 10689	
C262	CK 47NF+-5%63V5RM MKT CAPACITOR	CK 099.2917	WIMA	MKS2/63/0,047UF/5%	

Für diese Unterlage behalten wir uns alle Rechte vor

Kennz. Comp.No.	Benennung Designation	Sachnummer Stock No.	Hersteller Manufacturer	Bezeichnung Designation	enthalten in contained in
C281	CC 8,2PF+-0,25PF3X4NP0 CAPACITOR	CC 087.6412	VALVO	2222 678 09828	
C282	CC 8,2PF+-0,25PF3X4NP0 CAPACITOR	CC 087.6412	VALVO	2222 678 09828	
C283	CC 27PF+-2%4X5NP0 CAPACITOR	CC 087.6470	VALVO	2222 678 10279	
C285	CC 68PF+-2%6X7NP0 CAPACITOR	CC 087.6529	VALVO	2222 678 10689	
C287	CC 100PF+-2%6X9NP0 CAPACITOR	CC 087.6541	VALVO	2222 678 10101	
C288	CC 100PF+-2%6X9NP0 CAPACITOR	CC 087.6541	VALVO	2222 678 10101	
C300 ..305	CC 10NF-20+50%7X8R4000 CAPACITOR	CC 087.7525	VALVO	2222 63051 64051103	
C331 ..336	CC 10NF-20+50%7X8R4000 CAPACITOR	CC 087.7525	VALVO	2222 63051 64051103	
C350	CC 10NF-20+50%7X8R4000 CAPACITOR	CC 087.7525	VALVO	2222 63051 64051103	
C351	CC 10NF-20+50%7X8R4000 CAPACITOR	CC 087.7525	VALVO	2222 63051 64051103	
C353 ..358	CC 10NF-20+50%7X8R4000 CAPACITOR	CC 087.7525	VALVO	2222 63051 64051103	
C366	CC 10NF-20+50%7X8R4000 CAPACITOR	CC 087.7525	VALVO	2222 63051 64051103	
C369	CC 10NF-20+50%7X8R4000 CAPACITOR	CC 087.7525	VALVO	2222 63051 64051103	
C391 ..396	CC 10NF-20+50%7X8R4000 CAPACITOR	CC 087.7525	VALVO	2222 63051 64051103	
C397	CC 4,7PF+-0,25PF3X4NP0 CAPACITOR	CC 087.6387	VALVO	2222 678 09478	
C398	CC 10PF+-0,25PF3X4NP0 CAPACITOR	CC 087.6429	VALVO	2222 678 09109	
C399	CC 33PF+-2%4X5NP0 CAPACITOR	CC 087.6487	VALVO	2222 678 10339	
C400	CC 33PF+-2%4X5NP0 CAPACITOR	CC 087.6487	VALVO	2222 678 10339	
C401	CC 120PF+-2%6X9NP0 CAPACITOR	CC 087.6558	VALVO	2222 678 10121	
C402	CC 15PF+-2%3X4NP0 CAPACITOR	CC 087.6441	VALVO	2222 678 10159	
C405	CC 22PF+-2%4X5NP0 CAPACITOR	CC 087.6464	VALVO	2222 678 10229	
C421	CC 10NF-20+50%7X8R4000 CAPACITOR	CC 087.7525	VALVO	2222 63051 64051103	
C422	CC 10NF-20+50%7X8R4000 CAPACITOR	CC 087.7525	VALVO	2222 63051 64051103	
C430 ..433	CC 10NF-20+50%7X8R4000 CAPACITOR	CC 087.7525	VALVO	2222 63051 64051103	
C500	CC 10NF-20+50%7X8R4000 CAPACITOR	CC 087.7525	VALVO	2222 63051 64051103	
C501	CC 10NF-20+50%7X8R4000 CAPACITOR	CC 087.7525	VALVO	2222 63051 64051103	
C505	CC 10NF-20+50%7X8R4000 CAPACITOR	CC 087.7525	VALVO	2222 63051 64051103	
C506	CC 10NF-20+50%7X8R4000 CAPACITOR	CC 087.7525	VALVO	2222 63051 64051103	
C507	CC 10NF-20+50%7X8R4000 CAPACITOR	CC 087.7525	VALVO	2222 63051 64051103	
C565	CK 47NF+-5%63V5RM MKT CAPACITOR	CK 099.2917	WIMA	MKS2/63/0,047UF/5%	
C590	CC 10NF-20+50%7X8R4000 CAPACITOR	CC 087.7525	VALVO	2222 63051 64051103	
C591	CC 10NF-20+50%7X8R4000 CAPACITOR	CC 087.7525	VALVO	2222 63051 64051103	
C594	CC 10NF-20+50%7X8R4000 CAPACITOR	CC 087.7525	VALVO	2222 63051 64051103	
C595	CC 10NF-20+50%7X8R4000 CAPACITOR	CC 087.7525	VALVO	2222 63051 64051103	
C600	CC 10NF-20+50%7X8R4000 CAPACITOR	CC 087.7525	VALVO	2222 63051 64051103	
C603	CC 15PF+-2%3X4NP0 CAPACITOR	CC 087.6441	VALVO	2222 678 10159	
C604	CK 47NF+-5%63V5RM MKT CAPACITOR	CK 099.2917	WIMA	MKS2/63/0,047UF/5%	
C609	CC 10NF-20+50%7X8R4000 CAPACITOR	CC 087.7525	VALVO	2222 63051 64051103	
C610	CK 47NF+-5%63V5RM MKT CAPACITOR	CK 099.2917	WIMA	MKS2/63/0,047UF/5%	

Für diese Unterlage behalten wir uns alle Rechte vor

Kennz. Comp.No.	Benennung Designation	Sachnummer Stock No.	Hersteller Manufacturer	Bezeichnung Designation	enthalten in contained in
C611	CK 47NF+-5%63V5RM MKT CAPACITOR	CK 099.2917	WIMA	MKS2/63/0,047UF/5%	
C612	CC 10NF-20+50%7X8R4000 CAPACITOR	CC 087.7525	VALVO	2222 63051 64051103	
C613	CC 10NF-20+50%7X8R4000 CAPACITOR	CC 087.7525	VALVO	2222 63051 64051103	
C614	CE 100UF-10+50% 16V 9X13 ELECTROLYTIC CAPACITOR	CE 006.7165	ROEDERST	EK 00CB 310 D	
C615	CK 47NF+-5%63V5RM MKT CAPACITOR	CK 099.2917	WIMA	MKS2/63/0,047UF/5%	
C616	CC 68PF+-2%6X7NP0 CAPACITOR	CC 087.6529	VALVO	2222 678 10689	
C619	CK 47NF+-5%63V5RM MKT CAPACITOR	CK 099.2917	WIMA	MKS2/63/0,047UF/5%	
C713	CK 1UF+-10%50V5RM MKT CAPACITOR	CK 099.2998	WIMA	MKS2/50/1UF/10%	
C715	CK 100NF+-5%63V5RM MKT CAPACITOR	CK 099.2930	WIMA	MKS/2/63/0,1UF/5%	
C716	CE 10UF -10+50% 63V 9X13 ELECTROLYTIC CAPACITOR	CE 022.7650	ROEDERST	ELKOEK10/63	
C717	CC 47PF+-2%5X6NP0 CAPACITOR	CC 087.6506	VALVO	2222 678 10479	
C718	CK 1UF+-10%50V5RM MKT CAPACITOR	CK 099.2998	WIMA	MKS2/50/1UF/10%	
C721	CC 10PF+-0,25PF3X4NP0 CAPACITOR	CC 087.6429	VALVO	2222 678 09109	
C745	CK 100NF+-5%63V5RM MKT CAPACITOR	CK 099.2930	WIMA	MKS/2/63/0,1UF/5%	
C772	CC 10NF-20+50%7X8R4000 CAPACITOR	CC 087.7525	VALVO	2222 63051 64051103	
C774	CK 1UF+-10%50V5RM MKT CAPACITOR	CK 099.2998	WIMA	MKS2/50/1UF/10%	
D3	BL PC74HC377P 8XD-FF EN OCTAL D-FLIP-FLOP	BL 806.0045	VALVO	PC74HC377P	
L1	LD 0,12UH10%0,090HM1,300A CHOKE	LD 067.2757	DELEVAN	DROSSEL1025-96	
L10	LD 6,80UH10%2,000HM0,185A CHOKE	LD 026.4178	DELEVAN	DROSSEL1025-40	
L21	LD 100 UH10%8,000HM0,084A CHOKE	LD 067.3101	DELEVAN	DROSSEL1025-68	
L30	LD 6,80UH10%2,000HM0,185A CHOKE	LD 026.4178	DELEVAN	DROSSEL1025-40	
L40	LD 100 UH10%8,000HM0,084A CHOKE	LD 067.3101	DELEVAN	DROSSEL1025-68	
L50	LD 6,80UH10%2,000HM0,185A CHOKE	LD 026.4178	DELEVAN	DROSSEL1025-40	
L61	LD 100 UH10%8,000HM0,084A CHOKE	LD 067.3101	DELEVAN	DROSSEL1025-68	
L70	LD 6,80UH10%2,000HM0,185A CHOKE	LD 026.4178	DELEVAN	DROSSEL1025-40	
L81	LD 100 UH10%8,000HM0,084A CHOKE	LD 067.3101	DELEVAN	DROSSEL1025-68	
L90	LD 6,80UH10%2,000HM0,185A CHOKE	LD 026.4178	DELEVAN	DROSSEL1025-40	
L100	LD 100 UH10%8,000HM0,084A CHOKE	LD 067.3101	DELEVAN	DROSSEL1025-68	
L110	LD 33,0UH10%3,400HM0,130A CHOKE	LD 067.3047	DELEVAN	DROSSEL 1025-56	
L111	LF ROHRK.RD3,5X1,2X3 GETR TUBLAR CORE	LF 026.9257			
L112	LF ROHRK.RD3,5X1,2X3 GETR TUBLAR CORE	LF 026.9257			
L113	LF ROHRK.RD3,5X1,2X3 GETR TUBLAR CORE	LF 026.9257			
L120	LC 400NH 9WDG.RD9,4XH19 COIL	805.5420	STETTNER	N.R&S.ZCHNG.805.5420	
L130	LD 6,80UH10%2,000HM0,185A CHOKE	LD 026.4178	DELEVAN	DROSSEL1025-40	
L141	LD 100 UH10%8,000HM0,084A CHOKE	LD 067.3101	DELEVAN	DROSSEL1025-68	
L150	LD 6,80UH10%2,000HM0,185A CHOKE	LD 026.4178	DELEVAN	DROSSEL1025-40	
L161	LD 100 UH10%8,000HM0,084A CHOKE	LD 067.3101	DELEVAN	DROSSEL1025-68	
L170	LD 6,80UH10%2,000HM0,185A CHOKE	LD 026.4178	DELEVAN	DROSSEL1025-40	

Für diese Unterlage behalten wir uns alle Rechte vor

Kennz. Comp.No.	Benennung Designation	Sachnummer Stock No.	Hersteller Manufacturer	Bezeichnung Designation	enthalten in contained in
L181	LD 100 UH10%8,000HM0,084A CHOKE	LD 067.3101	DELEVAN	DROSSEL1025-68	
L190	LD 6,80UH10%2,000HM0,185A CHOKE	LD 026.4178	DELEVAN	DROSSEL1025-40	
L192	LD 1,50UH10%0,220HM0,560A CHOKE	LD 067.2886	DELEVAN	DROSSEL 1025-24	
L200	LD 100 UH10%8,000HM0,084A CHOKE	LD 067.3101	DELEVAN	DROSSEL1025-68	
L220	LD 6,80UH10%2,000HM0,185A CHOKE	LD 026.4178	DELEVAN	DROSSEL1025-40	
L231	LD 100 UH10%8,000HM0,084A CHOKE	LD 067.3101	DELEVAN	DROSSEL1025-68	
L242	LD 6,80UH10%2,000HM0,185A CHOKE	LD 026.4178	DELEVAN	DROSSEL1025-40	
L252	LD 100 UH10%8,000HM0,084A CHOKE	LD 067.3101	DELEVAN	DROSSEL1025-68	
L262	LD 100 UH10%8,000HM0,084A CHOKE	LD 067.3101	DELEVAN	DROSSEL1025-68	
L279	LF ROHRK.RD3,5X1,2X3 GETR TUBLAR CORE	LF 026.9257			
L280	LD 2,20UH10%0,400HM0,415A CHOKE	LD 067.2905	DELEVAN	DROSSEL1025-28	
L281	LD 4,70UH10%1,200HM0,239A CHOKE	LD 067.2940	DELEVAN	DROSSEL1025-36	
L282	LD 8,20UH10%2,700HM0,160A CHOKE	LD 067.2970	DELEVAN	DROSSEL1025-42	
L286	LF ROHRK.RD3,5X1,2X3 GETR TUBLAR CORE	LF 026.9257			
L300	LD 1,20UH10%0,180HM0,620A CHOKE	LD 067.2870	DELEVAN	DROSSEL1025-22	
L301	LD 1,20UH10%0,180HM0,620A CHOKE	LD 067.2870	DELEVAN	DROSSEL1025-22	
L330	LD 22,0UH10%3,300HM0,114A CHOKE	LD 067.3024	DELEVAN	DROSSEL1025-52	
L331	LF ROHRK.RD3,5X1,2X3 GETR TUBLAR CORE	LF 026.9257			
L350	LF ROHRK.RD3,5X1,2X3 GETR TUBLAR CORE	LF 026.9257			
L351	LD 22,0UH10%3,300HM0,114A CHOKE	LD 067.3024	DELEVAN	DROSSEL1025-52	
L352	LD 15,0UH10%2,800HM0,157A CHOKE	LD 067.3001	DELEVAN	DROSSEL1025-48	
L370	LD 15,0UH10%2,800HM0,157A CHOKE	LD 067.3001	DELEVAN	DROSSEL1025-48	
L390	LD 100 UH10%8,000HM0,084A CHOKE	LD 067.3101	DELEVAN	DROSSEL1025-68	
L391	LD 10 UH 10% 3R3 144 MA CHOKE	LD 026.4184	DELEVAN	DROSSEL1025-44	
L392	LD 6,80UH10%2,000HM0,185A CHOKE	LD 026.4178	DELEVAN	DROSSEL1025-40	
L393	LD 8,20UH10%2,700HM0,160A CHOKE	LD 067.2970	DELEVAN	DROSSEL1025-42	
L394	LD 12,0UH10%2,700HM0,160A CHOKE	LD 067.2992	DELEVAN	DROSSEL1025-46	
L395	LD 100 UH10%8,000HM0,084A CHOKE	LD 067.3101	DELEVAN	DROSSEL1025-68	
L396	LF ROHRK.RD3,5X1,2X3 GETR TUBLAR CORE	LF 026.9257			
L397	LF ROHRK.RD3,5X1,2X3 GETR TUBLAR CORE	LF 026.9257			
L420	LF ROHRK.RD3,5X1,2X3 GETR TUBLAR CORE	LF 026.9257			
L424	LD 4,70UH10%1,200HM0,239A CHOKE	LD 067.2940	DELEVAN	DROSSEL1025-36	
L431	LD 4,70UH10%1,200HM0,239A CHOKE	LD 067.2940	DELEVAN	DROSSEL1025-36	
L432	LF ROHRK.RD3,5X1,2X3 GETR TUBLAR CORE	LF 026.9257			
L500	LF ROHRK.RD3,5X1,2X3 GETR TUBLAR CORE	LF 026.9257			
L501	LF ROHRK.RD3,5X1,2X3 GETR TUBLAR CORE	LF 026.9257			
L505	LF ROHRK.RD3,5X1,2X3 GETR TUBLAR CORE	LF 026.9257			
L593	LF ROHRK.RD3,5X1,2X3 GETR TUBLAR CORE	LF 026.9257			
L600	LD 6,80UH10%2,000HM0,185A CHOKE	LD 026.4178	DELEVAN	DROSSEL1025-40	

Für diese Unterlage behalten wir uns alle Rechte vor

Kennz. Comp.No.	Benennung Designation	Sachnummer Stock No.	Hersteller Manufacturer	Bezeichnung Designation	enthalten in contained in
L611	LD 15,0UH10%2,800HMO,157A CHOKE	LD 067.3001	DELEVAN	DROSSEL1025-48	
L615	LD 1,50UH10%0,220HMO,560A CHOKE	LD 067.2886	DELEVAN	DROSSEL 1025-24	
L617	LD 100 UH10%8,000HMO,084A CHOKE	LD 067.3101	DELEVAN	DROSSEL1025-68	
N30	BO LM124J 4XL.P.OPAMP OPERATIONAL AMPLIFIER	300.6353	NSC	LM124J	
N710	BO LF156J BIFET OPAMP OPERATIONAL AMPLIFIER	BO 645.7251	MOTOROLA	LF156J	
N730	BO LF412CN 2XFET OPAMP OPERATIONAL AMPLIFIER	356.0521	NSC	LF412CN	
N750	BO LF412CN 2XFET OPAMP OPERATIONAL AMPLIFIER	356.0521	NSC	LF412CN	
R1	RL 0,35W 68,1 OHM+-1%TK50 RESISTOR	RL 082.9636	DRALORIC	SMA0207/68,1OHM-F-D	
R2	RL 0,35W 39,2 OHM+-1%TK50 RESISTOR	RL 082.9420	DRALORIC	SMA0207/39,2OHM-F-D	
R9	RS 0,5W 20 OHM+-20%CERMET RS 0.5W 20 OHM+-20%CERMET	RS 083.5763	BOURNS	3329H-1-200	
R10	RL 0,35W 100 OHM+-1%TK50 METALFILM-RESISTOR	RL 082.6543	DRALORIC	SMA0207/100/HM-F-D	
R11	RL 0,35W 191 OHM+-1%TK50 RESISTOR	RL 083.0032	DRALORIC	SMA0207/191OHM-F-D	
R12	RL 0,35W 4,12KOHM+-1%TK50 RESISTOR	RL 083.1051	DRALORIC	SMA0207/4,12K-F-D	
R13	RL 0,35W 4,12KOHM+-1%TK50 RESISTOR	RL 083.1051	DRALORIC	SMA0207/4,12K-F-D	
R14	RL 0,35W 100 OHM+-1%TK50 METALFILM-RESISTOR	RL 082.6543	DRALORIC	SMA0207/100/HM-F-D	
R15	RL 0,35W 825 OHM+-1%TK50 RESISTOR	RL 082.2502	DRALORIC	SMA 0207/825OHM-F-C	
R16	RL 0,35W 562 OHM+-1%TK50 RESISTOR	RL 083.0461	DRALORIC	SMA0207/562OHM-F-D	
R17	RL 0,35W 100 OHM+-1%TK50 METALFILM-RESISTOR	RL 082.6543	DRALORIC	SMA0207/100/HM-F-D	
R18	RL 0,35W 221 OHM+-1%TK50 RESISTOR	RL 083.0084	DRALORIC	SMA0207/221OHM-F-D	
R19	RL 0,35W 562 OHM+-1%TK50 RESISTOR	RL 083.0461	DRALORIC	SMA0207/562OHM-F-D	
R20	RL 0,35W 221 OHM+-1%TK50 RESISTOR	RL 083.0084	DRALORIC	SMA0207/221OHM-F-D	
R22	RL 0,35W 100KOHM+-1%TK50 RESISTOR	RL 082.1764	DRALORIC	SMA0207/100K-F-C	
R23	RL 0,35W 619 OHM+-1%TK50 RESISTOR	RL 083.0478	DRALORIC	SMA0207/619OHM-F-D	
R24	RL 0,35W 619 OHM+-1%TK50 RESISTOR	RL 083.0478	DRALORIC	SMA0207/619OHM-F-D	
R25	RL 0,35W 475 OHM+-1%TK50 RESISTOR	RL 083.0390	DRALORIC	SMA0207/475OHM-F-D	
R26	RL 0,35W 100 OHM+-1%TK50 METALFILM-RESISTOR	RL 082.6543	DRALORIC	SMA0207/100/HM-F-D	
R30	RL 0,35W 100 OHM+-1%TK50 METALFILM-RESISTOR	RL 082.6543	DRALORIC	SMA0207/100/HM-F-D	
R31	RL 0,35W 4,12KOHM+-1%TK50 RESISTOR	RL 083.1051	DRALORIC	SMA0207/4,12K-F-D	
R32	RL 0,35W 4,12KOHM+-1%TK50 RESISTOR	RL 083.1051	DRALORIC	SMA0207/4,12K-F-D	
R33	RL 0,35W 100 OHM+-1%TK50 METALFILM-RESISTOR	RL 082.6543	DRALORIC	SMA0207/100/HM-F-D	
R34	RL 0,35W 562 OHM+-1%TK50 RESISTOR	RL 083.0461	DRALORIC	SMA0207/562OHM-F-D	
R35	RL 0,35W 100 OHM+-1%TK50 METALFILM-RESISTOR	RL 082.6543	DRALORIC	SMA0207/100/HM-F-D	
R36	RL 0,35W 221 OHM+-1%TK50 RESISTOR	RL 083.0084	DRALORIC	SMA0207/221OHM-F-D	
R37	RL 0,35W 825 OHM+-1%TK50 RESISTOR	RL 082.2502	DRALORIC	SMA 0207/825OHM-F-C	
R38	RL 0,35W 562 OHM+-1%TK50 RESISTOR	RL 083.0461	DRALORIC	SMA0207/562OHM-F-D	
R39	RL 0,35W 221 OHM+-1%TK50 RESISTOR	RL 083.0084	DRALORIC	SMA0207/221OHM-F-D	
R41	RL 0,35W 100KOHM+-1%TK50 RESISTOR	RL 082.1764	DRALORIC	SMA0207/100K-F-C	
R42	RL 0,35W 619 OHM+-1%TK50 RESISTOR	RL 083.0478	DRALORIC	SMA0207/619OHM-F-D	

Für diese Unterlage behalten wir uns alle Rechte vor

Kennz. Comp.No.	Benennung Designation	Sachnummer Stock No.	Hersteller Manufacturer	Bezeichnung Designation	enthalten in contained in
R43	RL 0,35W 619 OHM+-1%TK50 RESISTOR	RL 083.0478	DRALORIC	SMA0207/619OHM-F-D	
R44	RL 0,35W 475 OHM+-1%TK50 RESISTOR	RL 083.0390	DRALORIC	SMA0207/475OHM-F-D	
R45	RL 0,35W 191 OHM+-1%TK50 RESISTOR	RL 083.0032	DRALORIC	SMA0207/191OHM-F-D	
R46	RS 0,5W 20 OHM+-20%CERMET RS 0.5W 20 OHM+-20%CERMET	RS 083.5763	BOURNS	3329H-1-200	
R47	RL 0,35W 100 OHM+-1%TK50 METALFILM-RESISTOR	RL 082.6543	DRALORIC	SMA0207/100/HM-F-D	
R50	RL 0,35W 100 OHM+-1%TK50 METALFILM-RESISTOR	RL 082.6543	DRALORIC	SMA0207/100/HM-F-D	
R51	RL 0,35W 130 OHM+-1%TK50 RESISTOR	RL 082.9888	DRALORIC	SMA0207/1300HM-F-D	
R52	RL 0,35W 3,32KOHM+-1%TK50 RESISTOR	RL 083.0990	DRALORIC	SMA0207/3,32K-F-D	
R53	RL 0,35W 3,32KOHM+-1%TK50 RESISTOR	RL 083.0990	DRALORIC	SMA0207/3,32K-F-D	
R54	RL 0,35W 562 OHM+-1%TK50 RESISTOR	RL 083.0461	DRALORIC	SMA0207/5620HM-F-D	
R55	RL 0,35W 100 OHM+-1%TK50 METALFILM-RESISTOR	RL 082.6543	DRALORIC	SMA0207/100/HM-F-D	
R56	RL 0,35W 100 OHM+-1%TK50 METALFILM-RESISTOR	RL 082.6543	DRALORIC	SMA0207/100/HM-F-D	
R57	RL 0,35W 825 OHM+-1%TK50 RESISTOR	RL 082.2502	DRALORIC	SMA 0207/8250HM-F-C	
R58	RL 0,35W 221 OHM+-1%TK50 RESISTOR	RL 083.0084	DRALORIC	SMA0207/2210HM-F-D	
R59	RL 0,35W 562 OHM+-1%TK50 RESISTOR	RL 083.0461	DRALORIC	SMA0207/5620HM-F-D	
R60	RL 0,35W 221 OHM+-1%TK50 RESISTOR	RL 083.0084	DRALORIC	SMA0207/2210HM-F-D	
R62	RL 0,35W 100KOHM+-1%TK50 RESISTOR	RL 082.1764	DRALORIC	SMA0207/100K-F-C	
R63	RL 0,35W 562 OHM+-1%TK50 RESISTOR	RL 083.0461	DRALORIC	SMA0207/5620HM-F-D	
R64	RL 0,35W 562 OHM+-1%TK50 RESISTOR	RL 083.0461	DRALORIC	SMA0207/5620HM-F-D	
R65	RL 0,35W 475 OHM+-1%TK50 RESISTOR	RL 083.0390	DRALORIC	SMA0207/4750HM-F-D	
R66	RS 0,5W 20 OHM+-20%CERMET RS 0.5W 20 OHM+-20%CERMET	RS 083.5763	BOURNS	3329H-1-200	
R67	RL 0,35W 100 OHM+-1%TK50 METALFILM-RESISTOR	RL 082.6543	DRALORIC	SMA0207/100/HM-F-D	
R70	RL 0,35W 100 OHM+-1%TK50 METALFILM-RESISTOR	RL 082.6543	DRALORIC	SMA0207/100/HM-F-D	
R71	RL 0,35W 130 OHM+-1%TK50 RESISTOR	RL 082.9888	DRALORIC	SMA0207/1300HM-F-D	
R72	RL 0,35W 3,32KOHM+-1%TK50 RESISTOR	RL 083.0990	DRALORIC	SMA0207/3,32K-F-D	
R73	RL 0,35W 3,32KOHM+-1%TK50 RESISTOR	RL 083.0990	DRALORIC	SMA0207/3,32K-F-D	
R74	RL 0,35W 562 OHM+-1%TK50 RESISTOR	RL 083.0461	DRALORIC	SMA0207/5620HM-F-D	
R75	RL 0,35W 100 OHM+-1%TK50 METALFILM-RESISTOR	RL 082.6543	DRALORIC	SMA0207/100/HM-F-D	
R76	RL 0,35W 100 OHM+-1%TK50 METALFILM-RESISTOR	RL 082.6543	DRALORIC	SMA0207/100/HM-F-D	
R77	RL 0,35W 825 OHM+-1%TK50 RESISTOR	RL 082.2502	DRALORIC	SMA 0207/8250HM-F-C	
R78	RL 0,35W 221 OHM+-1%TK50 RESISTOR	RL 083.0084	DRALORIC	SMA0207/2210HM-F-D	
R79	RL 0,35W 562 OHM+-1%TK50 RESISTOR	RL 083.0461	DRALORIC	SMA0207/5620HM-F-D	
R80	RL 0,35W 221 OHM+-1%TK50 RESISTOR	RL 083.0084	DRALORIC	SMA0207/2210HM-F-D	
R82	RL 0,35W 100KOHM+-1%TK50 RESISTOR	RL 082.1764	DRALORIC	SMA0207/100K-F-C	
R83	RL 0,35W 562 OHM+-1%TK50 RESISTOR	RL 083.0461	DRALORIC	SMA0207/5620HM-F-D	
R84	RL 0,35W 562 OHM+-1%TK50 RESISTOR	RL 083.0461	DRALORIC	SMA0207/5620HM-F-D	
R85	RL 0,35W 475 OHM+-1%TK50 RESISTOR	RL 083.0390	DRALORIC	SMA0207/4750HM-F-D	
R86	RS 0,5W 20 OHM+-20%CERMET RS 0.5W 20 OHM+-20%CERMET	RS 083.5763	BOURNS	3329H-1-200	
R87	RL 0,35W 100 OHM+-1%TK50 METALFILM-RESISTOR	RL 082.6543	DRALORIC	SMA0207/100/HM-F-D	

uns alle Rechte vor

Kennz. Comp.No.	Benennung Designation	Sachnummer Stock No.	Hersteller Manufacturer	Bezeichnung Designation	enthalten in contained in
R90	RL 0,35W 100 OHM+-1%TK50 METALFILM-RESISTOR	RL 082.6543	DRALORIC	SMA0207/100/HM-F-D	
R91	RL 0,35W 130 OHM+-1%TK50 RESISTOR	RL 082.9888	DRALORIC	SMA0207/1300HM-F-D	
R92	RL 0,35W 3,32KOHM+-1%TK50 RESISTOR	RL 083.0990	DRALORIC	SMA0207/3,32K-F-D	
R93	RL 0,35W 3,32KOHM+-1%TK50 RESISTOR	RL 083.0990	DRALORIC	SMA0207/3,32K-F-D	
R94	RL 0,35W 100 OHM+-1%TK50 METALFILM-RESISTOR	RL 082.6543	DRALORIC	SMA0207/100/HM-F-D	
R95	RL 0,35W 562 OHM+-1%TK50 RESISTOR	RL 083.0461	DRALORIC	SMA0207/5620HM-F-D	
R96	RL 0,35W 100 OHM+-1%TK50 METALFILM-RESISTOR	RL 082.6543	DRALORIC	SMA0207/100/HM-F-D	
R97	RL 0,35W 221 OHM+-1%TK50 RESISTOR	RL 083.0084	DRALORIC	SMA0207/2210HM-F-D	
R98	RL 0,35W 562 OHM+-1%TK50 RESISTOR	RL 083.0461	DRALORIC	SMA0207/5620HM-F-D	
R99	RL 0,35W 825 OHM+-1%TK50 RESISTOR	RL 082.2502	DRALORIC	SMA 0207/8250HM-F-C	
R101	RL 0,35W 100KOHM+-1%TK50 RESISTOR	RL 082.1764	DRALORIC	SMA0207/100K-F-C	
R102	RL 0,35W 562 OHM+-1%TK50 RESISTOR	RL 083.0461	DRALORIC	SMA0207/5620HM-F-D	
R103	RL 0,35W 562 OHM+-1%TK50 RESISTOR	RL 083.0461	DRALORIC	SMA0207/5620HM-F-D	
R104	RL 0,35W 475 OHM+-1%TK50 RESISTOR	RL 083.0390	DRALORIC	SMA0207/4750HM-F-D	
R105	RL 0,35W 47,5 OHM+-1%TK50 RESISTOR	RL 082.9507	DRALORIC	SMA0207/47,50HM-F-D	
R106	RS 0,5W 20 OHM+-20%CERMET RS 0.5W 20 OHM+-20%CERMET	RS 083.5763	BOURNS	3329H-1-200	
R107	RL 0,35W 100 OHM+-1%TK50 METALFILM-RESISTOR	RL 082.6543	DRALORIC	SMA0207/100/HM-F-D	
R111	RL 0,35W 1,50KOHM+-1%TK50 RESISTOR	RL 083.0732	DRALORIC	SMA0207/1,50K-F-D	
R112	RL 0,35W 2,21KOHM+-1%TK50 RESISTOR	RL 082.2477	DRALORIC	SMA 0207/2,21K-F-C	
R113	RL 0,35W 2,21KOHM+-1%TK50 RESISTOR	RL 082.2477	DRALORIC	SMA 0207/2,21K-F-C	
R114	RL 0,35W 2,21KOHM+-1%TK50 RESISTOR	RL 082.2477	DRALORIC	SMA 0207/2,21K-F-C	
R117	RL 0,35W 1,50KOHM+-1%TK50 RESISTOR	RL 083.0732	DRALORIC	SMA0207/1,50K-F-D	
R118	RL 0,35W 12,1KOHM+-1%TK50 RESISTOR	RL 083.1351	DRALORIC	SMA0207/12,1K-F-D	
R119	RL 0,35W 2,21KOHM+-1%TK50 RESISTOR	RL 082.2477	DRALORIC	SMA 0207/2,21K-F-C	
R120	RL 0,35W 332 OHM+-1%TK50 RESISTOR	RL 083.0255	DRALORIC	SMA0207/3320HM-F-D	
R121	RL 0,35W 221 OHM+-1%TK50 RESISTOR	RL 083.0084	DRALORIC	SMA0207/2210HM-F-D	
R122	RL 0,35W 221 OHM+-1%TK50 RESISTOR	RL 083.0084	DRALORIC	SMA0207/2210HM-F-D	
R123	RL 0,35W 100KOHM+-1%TK50 RESISTOR	RL 082.1764	DRALORIC	SMA0207/100K-F-C	
R124	RS 0,75W 200KOHM+-10%CERM DEPOS.-CARBON POTENTIOMET	RS 037.7444	BOURNS	3006P-1-200KOHM+-10%	
R125	RL 0,35W 10,0 OHM+-1%TK50 RESISTOR	RL 082.8852	DRALORIC	SMA0207/10OHM-F-D	
R126	RL 0,35W 4,75KOHM+-1%TK50 RESISTOR	RL 083.1097	DRALORIC	SMA0207/4,75K-F-D	
R130	RL 0,35W 100 OHM+-1%TK50 METALFILM-RESISTOR	RL 082.6543	DRALORIC	SMA0207/100/HM-F-D	
R131	RL 0,35W 130 OHM+-1%TK50 RESISTOR	RL 082.9888	DRALORIC	SMA0207/1300HM-F-D	
R132	RL 0,35W 3,32KOHM+-1%TK50 RESISTOR	RL 083.0990	DRALORIC	SMA0207/3,32K-F-D	
R133	RL 0,35W 3,32KOHM+-1%TK50 RESISTOR	RL 083.0990	DRALORIC	SMA0207/3,32K-F-D	
R134	RL 0,35W 562 OHM+-1%TK50 RESISTOR	RL 083.0461	DRALORIC	SMA0207/5620HM-F-D	
R135	RL 0,35W 100 OHM+-1%TK50 METALFILM-RESISTOR	RL 082.6543	DRALORIC	SMA0207/100/HM-F-D	
R136	RL 0,35W 100 OHM+-1%TK50 METALFILM-RESISTOR	RL 082.6543	DRALORIC	SMA0207/100/HM-F-D	
R137	RL 0,35W 825 OHM+-1%TK50 RESISTOR	RL 082.2502	DRALORIC	SMA 0207/8250HM-F-C	

Für diese Unterlage behalten wir uns alle Rechte vor

Kennz. Comp.No.	Benennung Designation	Sachnummer Stock No.	Hersteller Manufacturer	Bezeichnung Designation	enthalten in contained in
R138	RL 0,35W 221 OHM+-1%TK50 RESISTOR	RL 083.0084	DRALORIC	SMA0207/221OHM-F-D	
R139	RL 0,35W 562 OHM+-1%TK50 RESISTOR	RL 083.0461	DRALORIC	SMA0207/5620HM-F-D	
R140	RL 0,35W 221 OHM+-1%TK50 RESISTOR	RL 083.0084	DRALORIC	SMA0207/221OHM-F-D	
R142	RL 0,35W 100KOHM+-1%TK50 RESISTOR	RL 082.1764	DRALORIC	SMA0207/100K-F-C	
R143	RL 0,35W 562 OHM+-1%TK50 RESISTOR	RL 083.0461	DRALORIC	SMA0207/5620HM-F-D	
R144	RL 0,35W 562 OHM+-1%TK50 RESISTOR	RL 083.0461	DRALORIC	SMA0207/5620HM-F-D	
R145	RL 0,35W 475 OHM+-1%TK50 RESISTOR	RL 083.0390	DRALORIC	SMA0207/4750HM-F-D	
R146	RS 0,5W 20 OHM+-20%CERMET RS 0.5W 20 OHM+-20%CERMET	RS 083.5763	BOURNS	3329H-1-200	
R147	RL 0,35W 100 OHM+-1%TK50 METALFILM-RESISTOR	RL 082.6543	DRALORIC	SMA0207/100/HM-F-D	
R150	RL 0,35W 100 OHM+-1%TK50 METALFILM-RESISTOR	RL 082.6543	DRALORIC	SMA0207/100/HM-F-D	
R151	RL 0,35W 130 OHM+-1%TK50 RESISTOR	RL 082.9888	DRALORIC	SMA0207/1300HM-F-D	
R152	RL 0,35W 3,32KOHM+-1%TK50 RESISTOR	RL 083.0990	DRALORIC	SMA0207/3,32K-F-D	
R153	RL 0,35W 3,32KOHM+-1%TK50 RESISTOR	RL 083.0990	DRALORIC	SMA0207/3,32K-F-D	
R154	RL 0,35W 100 OHM+-1%TK50 METALFILM-RESISTOR	RL 082.6543	DRALORIC	SMA0207/100/HM-F-D	
R155	RL 0,35W 100 OHM+-1%TK50 METALFILM-RESISTOR	RL 082.6543	DRALORIC	SMA0207/100/HM-F-D	
R156	RL 0,35W 562 OHM+-1%TK50 RESISTOR	RL 083.0461	DRALORIC	SMA0207/5620HM-F-D	
R157	RL 0,35W 825 OHM+-1%TK50 RESISTOR	RL 082.2502	DRALORIC	SMA 0207/8250HM-F-C	
R158	RL 0,35W 221 OHM+-1%TK50 RESISTOR	RL 083.0084	DRALORIC	SMA0207/221OHM-F-D	
R159	RL 0,35W 562 OHM+-1%TK50 RESISTOR	RL 083.0461	DRALORIC	SMA0207/5620HM-F-D	
R160	RL 0,35W 221 OHM+-1%TK50 RESISTOR	RL 083.0084	DRALORIC	SMA0207/221OHM-F-D	
R162	RL 0,35W 100KOHM+-1%TK50 RESISTOR	RL 082.1764	DRALORIC	SMA0207/100K-F-C	
R163	RL 0,35W 562 OHM+-1%TK50 RESISTOR	RL 083.0461	DRALORIC	SMA0207/5620HM-F-D	
R164	RL 0,35W 562 OHM+-1%TK50 RESISTOR	RL 083.0461	DRALORIC	SMA0207/5620HM-F-D	
R165	RL 0,35W 475 OHM+-1%TK50 RESISTOR	RL 083.0390	DRALORIC	SMA0207/4750HM-F-D	
R166	RS 0,5W 20 OHM+-20%CERMET RS 0.5W 20 OHM+-20%CERMET	RS 083.5763	BOURNS	3329H-1-200	
R167	RL 0,35W 100 OHM+-1%TK50 METALFILM-RESISTOR	RL 082.6543	DRALORIC	SMA0207/100/HM-F-D	
R170	RL 0,35W 100 OHM+-1%TK50 METALFILM-RESISTOR	RL 082.6543	DRALORIC	SMA0207/100/HM-F-D	
R171	RL 0,35W 130 OHM+-1%TK50 RESISTOR	RL 082.9888	DRALORIC	SMA0207/1300HM-F-D	
R172	RL 0,35W 3,32KOHM+-1%TK50 RESISTOR	RL 083.0990	DRALORIC	SMA0207/3,32K-F-D	
R173	RL 0,35W 3,32KOHM+-1%TK50 RESISTOR	RL 083.0990	DRALORIC	SMA0207/3,32K-F-D	
R174	RL 0,35W 100 OHM+-1%TK50 METALFILM-RESISTOR	RL 082.6543	DRALORIC	SMA0207/100/HM-F-D	
R175	RL 0,35W 562 OHM+-1%TK50 RESISTOR	RL 083.0461	DRALORIC	SMA0207/5620HM-F-D	
R176	RL 0,35W 100 OHM+-1%TK50 METALFILM-RESISTOR	RL 082.6543	DRALORIC	SMA0207/100/HM-F-D	
R177	RL 0,35W 825 OHM+-1%TK50 RESISTOR	RL 082.2502	DRALORIC	SMA 0207/8250HM-F-C	
R178	RL 0,35W 221 OHM+-1%TK50 RESISTOR	RL 083.0084	DRALORIC	SMA0207/221OHM-F-D	
R179	RL 0,35W 562 OHM+-1%TK50 RESISTOR	RL 083.0461	DRALORIC	SMA0207/5620HM-F-D	
R180	RL 0,35W 221 OHM+-1%TK50 RESISTOR	RL 083.0084	DRALORIC	SMA0207/221OHM-F-D	
R182	RL 0,35W 100KOHM+-1%TK50 RESISTOR	RL 082.1764	DRALORIC	SMA0207/100K-F-C	
R183	RL 0,35W 475 OHM+-1%TK50 RESISTOR	RL 083.0390	DRALORIC	SMA0207/4750HM-F-D	

...uns alle Rechte vor

Kennz. Comp.No.	Benennung Designation	Sachnummer Stock No.	Hersteller Manufacturer	Bezeichnung Designation	enthalten in contained in
R184	RL 0,35W 562 OHM+-1%TK50 RESISTOR	RL 083.0461	DRALORIC	SMA0207/5620HM-F-D	
R185	RL 0,35W 562 OHM+-1%TK50 RESISTOR	RL 083.0461	DRALORIC	SMA0207/5620HM-F-D	
R186	RS 0,5W 20 OHM+-20%CERMET RS 0.5W 20 OHM+-20%CERMET	RS 083.5763	BOURNS	3329H-1-200	
R187	RL 0,35W 100 OHM+-1%TK50 METALFILM-RESISTOR	RL 082.6543	DRALORIC	SMA0207/100/HM-F-D	
R190	RL 0,35W 100 OHM+-1%TK50 METALFILM-RESISTOR	RL 082.6543	DRALORIC	SMA0207/100/HM-F-D	
R191	RL 0,35W 130 OHM+-1%TK50 RESISTOR	RL 082.9888	DRALORIC	SMA0207/1300HM-F-D	
R192	RL 0,35W 3,32KOHM+-1%TK50 RESISTOR	RL 083.0990	DRALORIC	SMA0207/3,32K-F-D	
R193	RL 0,35W 3,32KOHM+-1%TK50 RESISTOR	RL 083.0990	DRALORIC	SMA0207/3,32K-F-D	
R194	RL 0,35W 562 OHM+-1%TK50 RESISTOR	RL 083.0461	DRALORIC	SMA0207/5620HM-F-D	
R195	RL 0,35W 100 OHM+-1%TK50 METALFILM-RESISTOR	RL 082.6543	DRALORIC	SMA0207/100/HM-F-D	
R196	RL 0,35W 100 OHM+-1%TK50 METALFILM-RESISTOR	RL 082.6543	DRALORIC	SMA0207/100/HM-F-D	
R197	RL 0,35W 825 OHM+-1%TK50 RESISTOR	RL 082.2502	DRALORIC	SMA 0207/8250HM-F-C	
R198	RL 0,35W 221 OHM+-1%TK50 RESISTOR	RL 083.0084	DRALORIC	SMA0207/2210HM-F-D	
R199	RL 0,35W 562 OHM+-1%TK50 RESISTOR	RL 083.0461	DRALORIC	SMA0207/5620HM-F-D	
R201	RL 0,35W 100KOHM+-1%TK50 RESISTOR	RL 082.1764	DRALORIC	SMA0207/100K-F-C	
R202	RL 0,35W 475 OHM+-1%TK50 RESISTOR	RL 083.0390	DRALORIC	SMA0207/4750HM-F-D	
R203	RL 0,35W 562 OHM+-1%TK50 RESISTOR	RL 083.0461	DRALORIC	SMA0207/5620HM-F-D	
R204	RL 0,35W 562 OHM+-1%TK50 RESISTOR	RL 083.0461	DRALORIC	SMA0207/5620HM-F-D	
R205	RS 0,5W 20 OHM+-20%CERMET RS 0.5W 20 OHM+-20%CERMET	RS 083.5763	BOURNS	3329H-1-200	
R206	RL 0,35W 100 OHM+-1%TK50 METALFILM-RESISTOR	RL 082.6543	DRALORIC	SMA0207/100/HM-F-D	
R220	RL 0,35W 100 OHM+-1%TK50 METALFILM-RESISTOR	RL 082.6543	DRALORIC	SMA0207/100/HM-F-D	
R221	RS 0,5W 20 OHM+-20%CERMET RS 0.5W 20 OHM+-20%CERMET	RS 083.5763	BOURNS	3329H-1-200	
R222	RL 0,35W 100 OHM+-1%TK50 METALFILM-RESISTOR	RL 082.6543	DRALORIC	SMA0207/100/HM-F-D	
R223	RL 0,35W 191 OHM+-1%TK50 RESISTOR	RL 083.0032	DRALORIC	SMA0207/1910HM-F-D	
R224	RL 0,35W 4,12KOHM+-1%TK50 RESISTOR	RL 083.1051	DRALORIC	SMA0207/4,12K-F-D	
R225	RL 0,35W 4,12KOHM+-1%TK50 RESISTOR	RL 083.1051	DRALORIC	SMA0207/4,12K-F-D	
R226	RL 0,35W 562 OHM+-1%TK50 RESISTOR	RL 083.0461	DRALORIC	SMA0207/5620HM-F-D	
R227	RL 0,35W 100 OHM+-1%TK50 METALFILM-RESISTOR	RL 082.6543	DRALORIC	SMA0207/100/HM-F-D	
R228	RL 0,35W 221 OHM+-1%TK50 RESISTOR	RL 083.0084	DRALORIC	SMA0207/2210HM-F-D	
R229	RL 0,35W 825 OHM+-1%TK50 RESISTOR	RL 082.2502	DRALORIC	SMA 0207/8250HM-F-C	
R230	RL 0,35W 100 OHM+-1%TK50 METALFILM-RESISTOR	RL 082.6543	DRALORIC	SMA0207/100/HM-F-D	
R232	RL 0,35W 100KOHM+-1%TK50 RESISTOR	RL 082.1764	DRALORIC	SMA0207/100K-F-C	
R233	RL 0,35W 619 OHM+-1%TK50 RESISTOR	RL 083.0478	DRALORIC	SMA0207/6190HM-F-D	
R234	RL 0,35W 619 OHM+-1%TK50 RESISTOR	RL 083.0478	DRALORIC	SMA0207/6190HM-F-D	
R235	RL 0,35W 475 OHM+-1%TK50 RESISTOR	RL 083.0390	DRALORIC	SMA0207/4750HM-F-D	
R236	RL 0,35W 562 OHM+-1%TK50 RESISTOR	RL 083.0461	DRALORIC	SMA0207/5620HM-F-D	
R240	RL 0,35W 221 OHM+-1%TK50 RESISTOR	RL 083.0084	DRALORIC	SMA0207/2210HM-F-D	
R242	RL 0,35W 100 OHM+-1%TK50 METALFILM-RESISTOR	RL 082.6543	DRALORIC	SMA0207/100/HM-F-D	
R243	RL 0,35W 200 OHM+-1%TK50 RESISTOR	RL 083.0049	DRALORIC	SMA0207/2000HM-F-D	

Für diese Unterlage behalten wir uns alle Rechte vor

Kennz. Comp.No.	Benennung Designation	Sachnummer Stock No.	Hersteller Manufacturer	Bezeichnung Designation	enthalten in contained in
R389	RL 0,35W 10,0 OHM+-1%TK50 RESISTOR	RL 082.8852	DRALORIC	SMA0207/100HM-F-D	
R390	RL 0,35W 47,5 OHM+-1%TK50 RESISTOR	RL 082.9507	DRALORIC	SMA0207/47,50HM-F-D	
R391	RL 0,35W 3,32KOHM+-1%TK50 RESISTOR	RL 083.0990	DRALORIC	SMA0207/3,32K-F-D	
R392	RL 0,35W 8,25KOHM+-1%TK50 RESISTOR	RL 083.1239	DRALORIC	SMA0207/8,25K-F-D	
R393	RL 0,35W 392 OHM+-1%TK50 RESISTOR	RL 082.2183	DRALORIC	SMA0207/392K-F-C	
R394	RL 0,35W 121 OHM+-1%TK50 RESISTOR	RL 082.9859	DRALORIC	SMA0207/1210HM-F-D	
R396	RL 0,35W 332 OHM+-1%TK50 RESISTOR	RL 083.0255	DRALORIC	SMA0207/3320HM-F-D	
R397	RL 0,35W 4,75KOHM+-1%TK50 RESISTOR	RL 083.1097	DRALORIC	SMA0207/4,75K-F-D	
R398	RL 0,35W 4,75KOHM+-1%TK50 RESISTOR	RL 083.1097	DRALORIC	SMA0207/4,75K-F-D	
R400	RL 0,35W 10,0 OHM+-1%TK50 RESISTOR	RL 082.8852	DRALORIC	SMA0207/100HM-F-D	
R401	RL 0,35W 475 OHM+-1%TK50 RESISTOR	RL 083.0390	DRALORIC	SMA0207/4750HM-F-D	
R402	RL 0,35W 475 OHM+-1%TK50 RESISTOR	RL 083.0390	DRALORIC	SMA0207/4750HM-F-D	
R405	RL 0,35W2,21MOHM+-1%TK50 METALFILMRESISTOR	RL 099.8173	RESISTA	MK2 2,21MOHM 1% TK50	
R406	RS 0,3W 10KOHM+-10%CERMET TRIMMING POTENTIOMETER	RS 006.9145	BECKMAN	67W 10KOHM 10%	
R407	RL 0,35W 750 OHM+-1%TK50 RESISTOR	RL 082.2360	DRALORIC	SMA0207/7500HM-F-C	
R419	RL 0,35W 100 OHM+-1%TK50 METALFILM-RESISTOR	RL 082.6543	DRALORIC	SMA0207/100/HM-F-D	
R420	RL 0,35W 8,25KOHM+-1%TK50 RESISTOR	RL 083.1239	DRALORIC	SMA0207/8,25K-F-D	
R421	RL 0,35W 5,62KOHM+-1%TK50 RESISTOR	RL 082.2190	DRALORIC	SMA0207/5,62K-F-C	
R422	RL 0,35W 274 OHM+-1%TK50 RESISTOR	RL 083.0178	DRALORIC	SMA0207/2740HM-F-D	
R423	RL 0,35W 332 OHM+-1%TK50 RESISTOR	RL 083.0255	DRALORIC	SMA0207/3320HM-F-D	
R424	RL 0,35W 392 OHM+-1%TK50 RESISTOR	RL 082.2183	DRALORIC	SMA0207/392K-F-C	
R425	RL 0,35W 10,0 OHM+-1%TK50 RESISTOR	RL 082.8852	DRALORIC	SMA0207/100HM-F-D	
R426	RL 0,35W 10,0 OHM+-1%TK50 RESISTOR	RL 082.8852	DRALORIC	SMA0207/100HM-F-D	
R427	RL 0,35W 5,62KOHM+-1%TK50 RESISTOR	RL 082.2190	DRALORIC	SMA0207/5,62K-F-C	
R428	RL 0,35W 274 OHM+-1%TK50 RESISTOR	RL 083.0178	DRALORIC	SMA0207/2740HM-F-D	
R429	RL 0,35W 8,25KOHM+-1%TK50 RESISTOR	RL 083.1239	DRALORIC	SMA0207/8,25K-F-D	
R430	RL 0,35W 332 OHM+-1%TK50 RESISTOR	RL 083.0255	DRALORIC	SMA0207/3320HM-F-D	
R431	RL 0,35W 392 OHM+-1%TK50 RESISTOR	RL 082.2183	DRALORIC	SMA0207/392K-F-C	
R500	RL 0,35W 4,75KOHM+-1%TK50 RESISTOR	RL 083.1097	DRALORIC	SMA0207/4,75K-F-D	
R501	RL 0,35W 2,74KOHM+-1%TK50 RESISTOR	RL 083.0926	DRALORIC	SMA0207/2,74K-F-D	
R502	RL 0,35W 162 OHM+-1%TK50 RESISTOR	RL 082.9971	DRALORIC	SMA0207/1620HM-F-D	
R503	RL 0,35W 8,25KOHM+-1%TK50 RESISTOR	RL 083.1239	DRALORIC	SMA0207/8,25K-F-D	
R504	RL 0,35W 511 OHM+-1%TK50 RESISTOR	RL 083.0426	DRALORIC	SMA0207/5110HM-F-D	
R505	RL 0,35W 10,0 OHM+-1%TK50 RESISTOR	RL 082.8852	DRALORIC	SMA0207/100HM-F-D	
R506	RL 0,35W 1KOHM+-1%TK50 RESISTOR	RL 082.2160	DRALORIC	SMA0207/1K-F-C	
R507	RL 0,35W 221 OHM+-1%TK50 RESISTOR	RL 083.0084	DRALORIC	SMA0207/2210HM-F-D	
R560	RL 0,35W 100 OHM+-1%TK50 METALFILM-RESISTOR	RL 082.6543	DRALORIC	SMA0207/100/HM-F-D	
R561	RS 0,3W 100 OHM+-10%CERM. TRIMMING POTENTIOMETER	RS 006.6652	BOURNS	3296W-1- 100OHM+-10%	
R562	RL 0,35W 200 OHM+-1%TK50 RESISTOR	RL 083.0049	DRALORIC	SMA0207/200OHM-F-D	

Für diese Unterlage behalten wir uns alle Rechte vor

Kennz. Comp.No.	Benennung Designation	Sachnummer Stock No.	Hersteller Manufacturer	Bezeichnung Designation	enthalten in contained in
R563	RL 0,35W 100 OHM+-1%TK50 METALFILM-RESISTOR	RL 082.6543	DRALORIC	SMA0207/100/HM-F-D	
R564	RL 0,35W 3,92KOHM+-1%TK50 RESISTOR	RL 083.1039	RESISTA	MK2	
R565	RL 0,35W 100 OHM+-1%TK50 METALFILM-RESISTOR	RL 082.6543	DRALORIC	SMA0207/100/HM-F-D	
R570	RL 0,35W 182 OHM+-1%TK50 RESISTOR	RL 083.0010	DRALORIC	SMA0207/182OHM-F-D	
R571	RS 0,3W 100 OHM+-10%CERM. TRIMMING POTENTIOMETER	RS 006.6652	BOURNS	3296W-1- 100OHM+-10%	
R572	RL 0,35W 100 OHM+-1%TK50 METALFILM-RESISTOR	RL 082.6543	DRALORIC	SMA0207/100/HM-F-D	
R573	RL 0,35W 150 OHM+-1%TK50 RESISTOR	RL 082.9942	DRALORIC	SMA0207/150OHM-F-D	
R574	RL 0,35W 1,21KOHM+-1%TK50 RESISTOR	RL 083.0655	DRALORIC	SMA0207/1,21K-F-D	
R575	RL 0,35W 3,92KOHM+-1%TK50 RESISTOR	RL 083.1039	RESISTA	MK2	
R576	RL 0,35W 221 OHM+-1%TK50 RESISTOR	RL 083.0084	DRALORIC	SMA0207/221OHM-F-D	
R590	RL 0,35W 681 OHM+-1%TK50 RESISTOR	RL 083.0490	DRALORIC	SMA0207/681OHM-F-D	
R591	RL 0,35W 150 OHM+-1%TK50 RESISTOR	RL 082.9942	DRALORIC	SMA0207/150OHM-F-D	
R592	RL 0,35W 8,25KOHM+-1%TK50 RESISTOR	RL 083.1239	DRALORIC	SMA0207/8,25K-F-D	
R593	RL 0,35W 5,62KOHM+-1%TK50 RESISTOR	RL 082.2190	DRALORIC	SMA0207/5,62K-F-C	
R594	RL 0,35W 1KOHM+-1%TK50 RESISTOR	RL 082.2160	DRALORIC	SMA0207/1K-F-C	
R595	RL 0,35W 10,0 OHM+-1%TK50 RESISTOR	RL 082.8852	DRALORIC	SMA0207/10OHM-F-D	
R600	RL 0,35W 221 OHM+-1%TK50 RESISTOR	RL 083.0084	DRALORIC	SMA0207/221OHM-F-D	
R601	RL 0,35W 100 OHM+-1%TK50 METALFILM-RESISTOR	RL 082.6543	DRALORIC	SMA0207/100/HM-F-D	
R602	RS 0,5W 20 OHM+-20%CERMET RS 0.5W 20 OHM+-20%CERMET	RS 083.5763	BOURNS	3329H-1-200	
R603	RL 0,35W 130 OHM+-1%TK50 RESISTOR	RL 082.9888	DRALORIC	SMA0207/130OHM-F-D	
R604	RL 0,35W 3,32KOHM+-1%TK50 RESISTOR	RL 083.0990	DRALORIC	SMA0207/3,32K-F-D	
R605	RL 0,35W 3,32KOHM+-1%TK50 RESISTOR	RL 083.0990	DRALORIC	SMA0207/3,32K-F-D	
R606	RL 0,35W 100 OHM+-1%TK50. METALFILM-RESISTOR	RL 082.6543	DRALORIC	SMA0207/100/HM-F-D	
R607	RL 0,35W 825 OHM+-1%TK50 RESISTOR	RL 082.2502	DRALORIC	SMA 0207/825OHM-F-C	
R608	RL 0,35W 100 OHM+-1%TK50 METALFILM-RESISTOR	RL 082.6543	DRALORIC	SMA0207/100/HM-F-D	
R609	RL 0,35W 562 OHM+-1%TK50 RESISTOR	RL 083.0461	DRALORIC	SMA0207/562OHM-F-D	
R610	RL 0,35W 221 OHM+-1%TK50 RESISTOR	RL 083.0084	DRALORIC	SMA0207/221OHM-F-D	
R611	RL 0,35W 562 OHM+-1%TK50 RESISTOR	RL 083.0461	DRALORIC	SMA0207/562OHM-F-D	
R613	RL 0,35W 100 OHM+-1%TK50 METALFILM-RESISTOR	RL 082.6543	DRALORIC	SMA0207/100/HM-F-D	
R615	RL 0,35W 475 OHM+-1%TK50 RESISTOR	RL 083.0390	DRALORIC	SMA0207/475OHM-F-D	
R616	RL 0,35W 475 OHM+-1%TK50 RESISTOR	RL 083.0390	DRALORIC	SMA0207/475OHM-F-D	
R618	RL 0,35W 475 OHM+-1%TK50 RESISTOR	RL 083.0390	DRALORIC	SMA0207/475OHM-F-D	
R619	RL 0,35W 100KOHM+-1%TK50 RESISTOR	RL 082.1764	DRALORIC	SMA0207/100K-F-C	
R630	RL 0,35W 1,50KOHM+-1%TK50 RESISTOR	RL 083.0732	DRALORIC	SMA0207/1,50K-F-D	
R631	RL 0,35W 1,50KOHM+-1%TK50 RESISTOR	RL 083.0732	DRALORIC	SMA0207/1,50K-F-D	
R632	RL 0,35W 51,1 OHM+-1%TK50 RESISTOR	RL 082.9536	DRALORIC	SMA0207/51,1OHM-F-D	
R633	RL 0,35W 51,1 OHM+-1%TK50 RESISTOR	RL 082.9536	DRALORIC	SMA0207/51,1OHM-F-D	
R700	RL 0,35W 1,50KOHM+-1%TK50 RESISTOR	RL 083.0732	DRALORIC	SMA0207/1,50K-F-D	
R701	RS 0,3W 500 OHM+-10%CERM. TRIMMING POTENTIOMETER	RS 006.6675	BOURNS	3296W-1- 500OHM+-10%	

Für diese Unterlage behalten wir uns alle Rechte vor

Kennz. Comp.No.	Benennung Designation	Sachnummer Stock No.	Hersteller Manufacturer	Bezeichnung Designation	enthalten in contained in
R702	RL 0,35W 1KOHM+-1%TK50 RESISTOR	RL 082.2160	DRALORIC	SMAO207/1K-F-C	
R703	RS 0,3W 500 OHM+-10%CERM. TRIMMING POTENTIOMETER	RS 006.6675	BOURNS	3296W-1- 500OHM+-10%	
R704	RL 0,35W 15,0KOHM+-1%TK50 RESISTOR	RL 083.1400	DRALORIC	SMAO207/15K-F-D	
R710	RL 0,35W 4,75KOHM+-1%TK50 RESISTOR	RL 083.1097	DRALORIC	SMAO207/4,75K-F-D	
R711	RL 0,35W 4,75KOHM+-1%TK50 RESISTOR	RL 083.1097	DRALORIC	SMAO207/4,75K-F-D	
R712	RL 0,35W 10,0KOHM+-1%TK50 RESISTOR	RL 083.1297	DRALORIC	SMAO207/10K-F-D	
R713	RL 0,35W 4,75KOHM+-1%TK50 RESISTOR	RL 083.1097	DRALORIC	SMAO207/4,75K-F-D	
R714	RL 0,35W 681 OHM+-1%TK50 RESISTOR	RL 083.0490	DRALORIC	SMAO207/6810HM-F-D	
R715	RL 0,35W 4,75KOHM+-1%TK50 RESISTOR	RL 083.1097	DRALORIC	SMAO207/4,75K-F-D	
R716	RL 0,35W 3,32KOHM+-1%TK50 RESISTOR	RL 083.0990	DRALORIC	SMAO207/3,32K-F-D	
R717	RL 0,35W 3,92KOHM+-1%TK50 RESISTOR	RL 083.1039	RESISTA	MK2	
R718	RL 0,35W 1,50KOHM+-1%TK50 RESISTOR	RL 083.0732	DRALORIC	SMAO207/1,50K-F-D	
R719	RL 0,35W 47,5 OHM+-1%TK50 RESISTOR	RL 082.9507	DRALORIC	SMAO207/47,50HM-F-D	
R720	RL 0,35W 33,2KOHM+-1%TK50 RESISTOR	RL 083.1674	DRALORIC	SMAO207/33,2K-F-C	
R721	RL 0,35W 2,74KOHM+-1%TK50 RESISTOR	RL 083.0926	DRALORIC	SMAO207/2,74K-F-D	
R730	RL 0,35W 4,75KOHM+-1%TK50 RESISTOR	RL 083.1097	DRALORIC	SMAO207/4,75K-F-D	
R731	RL 0,35W 10,0KOHM+-1%TK50 RESISTOR	RL 083.1297	DRALORIC	SMAO207/10K-F-D	
R732	RL 0,35W 10,0KOHM+-1%TK50 RESISTOR	RL 083.1297	DRALORIC	SMAO207/10K-F-D	
R733	RL 0,35W 10,0KOHM+-1%TK50 RESISTOR	RL 083.1297	DRALORIC	SMAO207/10K-F-D	
R734	RL 0,35W 3,01KOHM+-1%TK50 RESISTOR	RL 083.0961	DRALORIC	SMAO207/3,01K-F-D	
R735	RL 0,35W 10,0KOHM+-1%TK50 RESISTOR	RL 083.1297	DRALORIC	SMAO207/10K-F-D	
R736	RL 0,35W 10,0KOHM+-1%TK50 RESISTOR	RL 083.1297	DRALORIC	SMAO207/10K-F-D	
R737	RL 0,35W 33,2KOHM+-1%TK50 RESISTOR	RL 083.1674	DRALORIC	SMAO207/33,2K-F-C	
R738	RL 0,35W 27,4KOHM+-1%TK50 RESISTOR	RL 082.2583	DRALORIC	SMA 0207/27,4K-F-C	
R740	RL 0,35W 68,1KOHM+-1%TK50 RESISTOR	RL 082.2602	DRALORIC	SMA 0207/68,1K-F-C	
R741	RL 0,35W 47,5KOHM+-1%TK50 RESISTOR	RL 083.1800	DRALORIC	SMA/207/47,5K-F-C	
R745	RL 0,35W 10,0KOHM+-1%TK50 RESISTOR	RL 083.1297	DRALORIC	SMAO207/10K-F-D	
R748	RL 0,35W 3,92KOHM+-1%TK50 RESISTOR	RL 083.1039	RESISTA	MK2	
R749	RL 0,35W 3,92KOHM+-1%TK50 RESISTOR	RL 083.1039	RESISTA	MK2	
R770	RL 0,35W 221 KOHM+-1%TK50 RESISTOR	RL 083.2270	DRALORIC	SMAO207/221K-F-C	
R771	RL 0,35W 10,0KOHM+-1%TK50 RESISTOR	RL 083.1297	DRALORIC	SMAO207/10K-F-D	
R772	RL 0,35W 12,1KOHM+-1%TK50 RESISTOR	RL 083.1351	DRALORIC	SMAO207/12,1K-F-D	
R773	RL 0,35W 332 OHM+-1%TK50 RESISTOR	RL 083.0255	DRALORIC	SMAO207/3320HM-F-D	
R774	RL 0,35W 1,50KOHM+-1%TK50 RESISTOR	RL 083.0732	DRALORIC	SMAO207/1,50K-F-D	
V10	AK CA3227E 5XN TR.ARRAY TRANSISTOR ARRAY	805.2415	RCA	CA3227E	
V30	AK CA3227E 5XN TR.ARRAY TRANSISTOR ARRAY	805.2415	RCA	CA3227E	
V50	AK CA3227E 5XN TR.ARRAY TRANSISTOR ARRAY	805.2415	RCA	CA3227E	
V70	AK CA3227E 5XN TR.ARRAY TRANSISTOR ARRAY	805.2415	RCA	CA3227E	

...uns alle Rechte vor

Kennz. Comp.No.	Benennung Designation		Sachnummer Stock No.	Hersteller Manufacturer	Bezeichnung Designation	enthalten in contained in
V90	AK CA3227E 5XN TR.ARRAY TRANSISTOR ARRAY		805.2415	RCA	CA3227E	
V110	AK 2N2369A N 15V 200MA TRANSISTOR	AK	010.4680	VALVO	2N2369A	
V111	AE QPND4154 50V PIN PINDIODE		805.5395	HEWLETT-P.	QPND4154	
V112	AM BF247B N-D 25V JFET FET	AM	010.8879	VALVO	BF247B	
V113	AK 2N2369A N 15V 200MA TRANSISTOR	AK	010.4680	VALVO	2N2369A	
V120	AE QPND4154 50V PIN PINDIODE		805.5395	HEWLETT-P.	QPND4154	
V121	AE QPND4154 50V PIN PINDIODE		805.5395	HEWLETT-P.	QPND4154	
V130	AK CA3227E 5XN TR.ARRAY TRANSISTOR ARRAY		805.2415	RCA	CA3227E	
V150	AK CA3227E 5XN TR.ARRAY TRANSISTOR ARRAY		805.2415	RCA	CA3227E	
V170	AK CA3227E 5XN TR.ARRAY TRANSISTOR ARRAY		805.2415	RCA	CA3227E	
V190	AK CA3227E 5XN TR.ARRAY TRANSISTOR ARRAY		805.2415	RCA	CA3227E	
V220	AK CA3227E 5XN TR.ARRAY TRANSISTOR ARRAY		805.2415	RCA	CA3227E	
V240	AK CA3227E 5XN TR.ARRAY TRANSISTOR ARRAY		805.2415	RCA	CA3227E	
V260	AK CA3227E 5XN TR.ARRAY TRANSISTOR ARRAY		805.2415	RCA	CA3227E	
V280	AK 2N2369A N 15V 200MA TRANSISTOR	AK	010.4680	VALVO	2N2369A	
V286	AK 2N2369A N 15V 200MA TRANSISTOR	AK	010.4680	VALVO	2N2369A	
V300	BJ SD5000N 4X ANALOGSCH BJ SD5000N 4XANALOGSWITCH	BJ	342.2340	SILICONIX	SD5000N	
V330	AK 2N2369A N 15V 200MA TRANSISTOR	AK	010.4680	VALVO	2N2369A	
V331	AK BFX48 P 30V 100MA TRANSISTOR	AK	010.3202	SGS	BFX48	
V340	AK BC337-40 N 45V 800MA TRANSISTOR		303.9524	SIEMENS	BC337-40	
V341	AK 2N2369A N 15V 200MA TRANSISTOR	AK	010.4680	VALVO	2N2369A	
V342	AE BA244 BER.SCH.DI.UHF DIODE	AE	439.6310	INTERMETAL	BA244	
V350	AK 2N2369A N 15V 200MA TRANSISTOR	AK	010.4680	VALVO	2N2369A	
V351	AK BFX48 P 30V 100MA TRANSISTOR	AK	010.3202	SGS	BFX48	
V352	AE BA244 BER.SCH.DI.UHF DIODE	AE	439.6310	INTERMETAL	BA244	
V353	AK BC337-40 N 45V 800MA TRANSISTOR		303.9524	SIEMENS	BC337-40	
V354	AK 2N2369A N 15V 200MA TRANSISTOR	AK	010.4680	VALVO	2N2369A	
V366	AE BA244 BER.SCH.DI.UHF DIODE	AE	439.6310	INTERMETAL	BA244	
V368	AK BC337-40 N 45V 800MA TRANSISTOR		303.9524	SIEMENS	BC337-40	
V373	AD 1N4448 75V OA15 UDI DIODE	AD	012.0700	TEXAS INST	1N4448 GEGURTET	
V374	AE 1N827 6,2V REFDI REFERENCE DIODE	AE	418.0029	CDI	1N827	
V390	AK BFX48 P 30V 100MA TRANSISTOR	AK	010.3202	SGS	BFX48	
V391	AE 5082-2835 SCHOTTKY DIODE	AE	263.8430	HEWLETT-P.	5082-2835	
V392	AE 5082-2835 SCHOTTKY DIODE	AE	263.8430	HEWLETT-P.	5082-2835	
V393	AK BF374 N 25V 100MA TRANSISTOR		377.3859	MOTOROLA	BF374	
V420	AK 2N2369A N 15V 200MA TRANSISTOR	AK	010.4680	VALVO	2N2369A	
V421	AK BFX48 P 30V 100MA TRANSISTOR	AK	010.3202	SGS	BFX48	
V430	AK 2N2369A N 15V 200MA TRANSISTOR	AK	010.4680	VALVO	2N2369A	
V431	AK BFX48 P 30V 100MA TRANSISTOR	AK	010.3202	SGS	BFX48	

Für diese Unterlage behalten wir uns alle Rechte vor

Kennz. Comp.No.	Benennung Designation	Sachnummer Stock No.	Hersteller Manufacturer	Bezeichnung Designation	enthalten in contained in
V500	AK 2N2369A N 15V 200MA TRANSISTOR	AK 010.4680	VALVO	2N2369A	
V501	AK 2N2369A N 15V 200MA TRANSISTOR	AK 010.4680	VALVO	2N2369A	
V505	AK 2N2369A N 15V 200MA TRANSISTOR	AK 010.4680	VALVO	2N2369A	
V506 ..511	AD 1N4448 75V 0A15 UDI DIODE	AD 012.0700	TEXAS INST	1N4448 GEGURTET	
V593	AK 2N2369A N 15V 200MA TRANSISTOR	AK 010.4680	VALVO	2N2369A	
V600	AK CA3227E 5XN TR.ARRAY TRANSISTOR ARRAY	805.2415	RCA	CA3227E	
V704	AM J111A N-D 35V JFET FET	AM 214.7685	SILICONIX	J111A	
V713	AK BCY79IX P 45V 200MA TRANSISTOR	AK 010.3777	VALVO	BCY79IX	
V714	AK BCY59IX N 45V 200MA TRANSISTOR	AK 010.5163	VALVO	BCY59IX	
V718	AK BCY59IX N 45V 200MA TRANSISTOR	AK 010.5163	VALVO	BCY59IX	
V720	AE 5082-2835 SCHOTTKY DIODE	AE 263.8430	HEWLETT-P.	5082-2835	
V730	BJ LM335H TEMP.SENSOR PRECION TEMP.SENSOR	395.2867	NSC	LM335H	
V750	AK BC327-40 P 45V 800MA TRANSISTOR	303.9518	INTERMETAL	BC327-40	
V773	AK 2N2219A N 40V 800MA TRANSISTOR	AK 083.6953	VALVO	2N2219A	
V774	AK BC327-40 P 45V 800MA TRANSISTOR	303.9518	INTERMETAL	BC327-40	
X1 ..6	FJ EINBAUWINKELST. SMC ANGLE CONNECTOR	FJ 249.9684	RADIALL	R 112 669	
X8	FJ EINBAUWINKELST. SMC ANGLE CONNECTOR	FJ 249.9684	RADIALL	R 112 669	
X11	VL WIRE-WRAP PIN WIRE-WRAP PIN	VL 088.4507	BERG	NR. 75 403-001	
X15	VL WIRE-WRAP PIN WIRE-WRAP PIN	VL 088.4507	BERG	NR. 75 403-001	
X30	VL WIRE-WRAP PIN WIRE-WRAP PIN	VL 088.4507	BERG	NR. 75 403-001	
X35	VL WIRE-WRAP PIN WIRE-WRAP PIN	VL 088.4507	BERG	NR. 75 403-001	
X50	VL WIRE-WRAP PIN WIRE-WRAP PIN	VL 088.4507	BERG	NR. 75 403-001	
X55	VL WIRE-WRAP PIN WIRE-WRAP PIN	VL 088.4507	BERG	NR. 75 403-001	
X70	VL WIRE-WRAP PIN WIRE-WRAP PIN	VL 088.4507	BERG	NR. 75 403-001	
X75	VL WIRE-WRAP PIN WIRE-WRAP PIN	VL 088.4507	BERG	NR. 75 403-001	
X80	FP INDIREKT.STECKERL.36P. PIN CONNECTOR 5-POLIG	FP 242.3600	BINDER	742-5-11-0178-00-36	
X81	FP KURZSCHLUSSBUCHSE SHORTING PLUG	FP 491.7042	PK	452-70302	
X90	VL WIRE-WRAP PIN WIRE-WRAP PIN	VL 088.4507	BERG	NR. 75 403-001	
X95	VL WIRE-WRAP PIN WIRE-WRAP PIN	VL 088.4507	BERG	NR. 75 403-001	
X120	VL WIRE-WRAP PIN WIRE-WRAP PIN	VL 088.4507	BERG	NR. 75 403-001	
X130	VL WIRE-WRAP PIN WIRE-WRAP PIN	VL 088.4507	BERG	NR. 75 403-001	
X135	VL WIRE-WRAP PIN WIRE-WRAP PIN	VL 088.4507	BERG	NR. 75 403-001	
X150	VL WIRE-WRAP PIN WIRE-WRAP PIN	VL 088.4507	BERG	NR. 75 403-001	
X155	VL WIRE-WRAP PIN WIRE-WRAP PIN	VL 088.4507	BERG	NR. 75 403-001	
X170	VL WIRE-WRAP PIN WIRE-WRAP PIN	VL 088.4507	BERG	NR. 75 403-001	
X175	VL WIRE-WRAP PIN WIRE-WRAP PIN	VL 088.4507	BERG	NR. 75 403-001	
X190	VL WIRE-WRAP PIN WIRE-WRAP PIN	VL 088.4507	BERG	NR. 75 403-001	
X195	VL WIRE-WRAP PIN WIRE-WRAP PIN	VL 088.4507	BERG	NR. 75 403-001	

Kennz. Comp.No.	Benennung Designation	Sachnummer Stock No.	Hersteller Manufacturer	Bezeichnung Designation	enthalten in contained in
X220	VL WIRE-WRAP PIN WIRE-WRAP PIN	VL 088.4507	BERG	NR. 75 403-001	
X229	VL WIRE-WRAP PIN WIRE-WRAP PIN	VL 088.4507	BERG	NR. 75 403-001	
X240	VL WIRE-WRAP PIN WIRE-WRAP PIN	VL 088.4507	BERG	NR. 75 403-001	
X249	VL WIRE-WRAP PIN WIRE-WRAP PIN	VL 088.4507	BERG	NR. 75 403-001	
X260	VL WIRE-WRAP PIN WIRE-WRAP PIN	VL 088.4507	BERG	NR. 75 403-001	
X280	FP INDIREKT.STECKERL.36P. PIN CONNECTOR 3-POLIG	FP 242.3600	BINDER	742-5-11-0178-00-36	
X281	FP KURZSCHLUSSBUCHSE SHORTING PLUG	FP 491.7042	PK	452-70302	
X290	VL WIRE-WRAP PIN WIRE-WRAP PIN	VL 088.4507	BERG	NR. 75 403-001	
X291	FP KURZSCHLUSSBUCHSE SHORTING PLUG	FP 491.7042	PK	452-70302	
X340	VL WIRE-WRAP PIN WIRE-WRAP PIN	VL 088.4507	BERG	NR. 75 403-001	
X341	FP KURZSCHL.BUCHSE OFFEN SHORTING PLUG	FP 342.1895	BERG	76264-101	
X350	VL WIRE-WRAP PIN WIRE-WRAP PIN	VL 088.4507	BERG	NR. 75 403-001	
X360	VL WIRE-WRAP PIN WIRE-WRAP PIN	VL 088.4507	BERG	NR. 75 403-001	
X386	FP INDIREKT.STECKERL.36P. PIN CONNECTOR 3-POLIG	FP 242.3600	BINDER	742-5-11-0178-00-36	
X387	FP KURZSCHLUSSBUCHSE SHORTING PLUG	FP 491.7042	PK	452-70302	
X390	VL WIRE-WRAP PIN WIRE-WRAP PIN	VL 088.4507	BERG	NR. 75 403-001	
X391	FP KURZSCHL.BUCHSE OFFEN SHORTING PLUG	FP 342.1895	BERG	76264-101	
X405	FP INDIREKT.STECKERL.36P. PIN CONNECTOR 3-POLIG	FP 242.3600	BINDER	742-5-11-0178-00-36	
X406	FP KURZSCHLUSSBUCHSE SHORTING PLUG	FP 491.7042	PK	452-70302	
X505	VL WIRE-WRAP PIN WIRE-WRAP PIN	VL 088.4507	BERG	NR. 75 403-001	
X560	VL WIRE-WRAP PIN WIRE-WRAP PIN	VL 088.4507	BERG	NR. 75 403-001	
X570	VL WIRE-WRAP PIN WIRE-WRAP PIN	VL 088.4507	BERG	NR. 75 403-001	
X605	VL WIRE-WRAP PIN WIRE-WRAP PIN	VL 088.4507	BERG	NR. 75 403-001	
X616	VL WIRE-WRAP PIN WIRE-WRAP PIN	VL 088.4507	BERG	NR. 75 403-001	
X21A	FP IND.STECKERLEISTE 64 P MALE MULTIPOINT CONNECTOR	FP 273.0490	PANDUIT	100-964-033/999	
X21C	FP IND.STECKERLEISTE 64 P MALE MULTIPOINT CONNECTOR	FP 273.0490	PANDUIT	100-964-033/999	
X21D	FP IND.STECKERLEISTE 64 P MALE MULTIPOINT CONNECTOR	FP 273.0490	PANDUIT	100-964-033/999	
X27A	VL WIRE-WRAP PIN WIRE-WRAP PIN	VL 088.4507	BERG	NR. 75 403-001	
X27B	VL WIRE-WRAP PIN WIRE-WRAP PIN	VL 088.4507	BERG	NR. 75 403-001	
X32A	VL WIRE-WRAP PIN WIRE-WRAP PIN	VL 088.4507	BERG	NR. 75 403-001	
X32B	VL WIRE-WRAP PIN WIRE-WRAP PIN	VL 088.4507	BERG	NR. 75 403-001	
X36A	FP INDIREKT.STECKERL.36P. PIN CONNECTOR 8-POLIG	FP 242.3600	BINDER	742-5-11-0178-00-36	
X36B	FP INDIREKT.STECKERL.36P. PIN CONNECTOR 8-POLIG	FP 242.3600	BINDER	742-5-11-0178-00-36	
X38A	VL WIRE-WRAP PIN WIRE-WRAP PIN	VL 088.4507	BERG	NR. 75 403-001	
X38B	VL WIRE-WRAP PIN WIRE-WRAP PIN	VL 088.4507	BERG	NR. 75 403-001	
X73A	FP INDIREKT.STECKERL.36P. PIN CONNECTOR	FP 242.3600	BINDER	742-5-11-0178-00-36	

Uns sind Rechte vor

Kennz. Comp.No.	Benennung Designation	Sachnummer Stock No.	Hersteller Manufacturer	Bezeichnung Designation	enthalten in contained in
X73B	5-POLIG FP INDIREKT.STECKERL.36P. PIN CONNECTOR 5-POLIG	FP 242.3600	BINDER	742-5-11-0178-00-36	- ENDE -

ROHDE & SCHWARZ	Äl	Datum Date	Schaltteiliste für Parts list for	Sachnummer Stock Nr.	Blatt Page
	26	0988	EE LIN/LOG	805.2315.01 SA	20-

uns sind Rechte vor

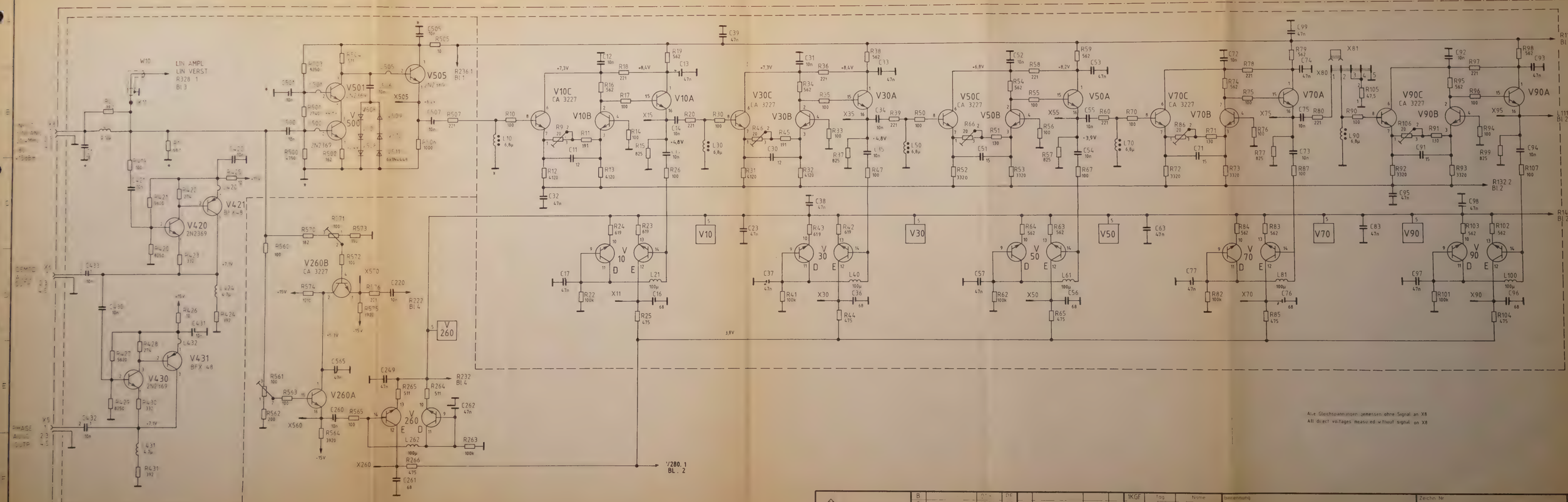

ROHDE&SCHWARZ	B																
	C																
	E	32765															
	Änd.		Datum	Name													
			05.86	PF													
			12.87	PA													
			Datum	Name	Änd.	Kennzeichen (Änderungsnummer)			Datum	Name		IKGF	Tag	Name	Benennung	Zeichn.-Nr.	Blatt-Nr.
												Bearb.	01.86	PF	LIN-LOG	805.2315 S	1
												Gepr.					v. 4 Bl.
												Normh.			zu Gerät FSA	neu z. v. 804.9516 V	neue z. 804.9516

Für diese Unterlage behalten wir uns alle Rechte vor

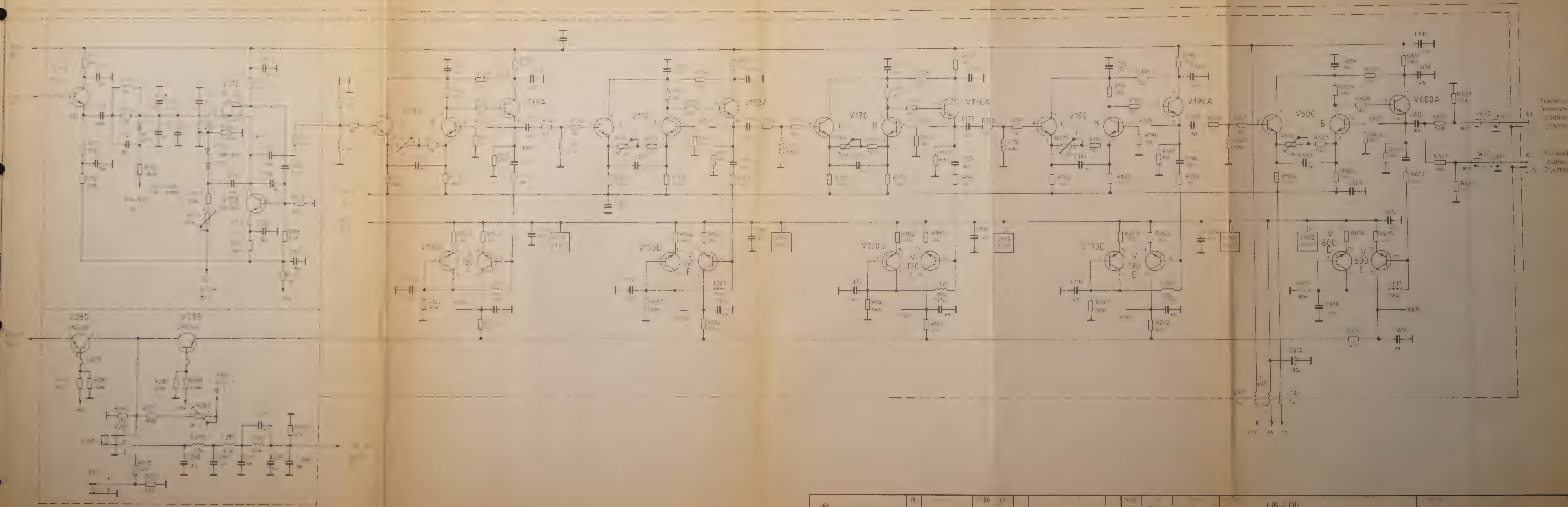

ROHDE&SCHWARZ	B	01 86	01 86	LIN-LOG	805. 2315 S	2 4
				FSA	804. 9516	804. 9516

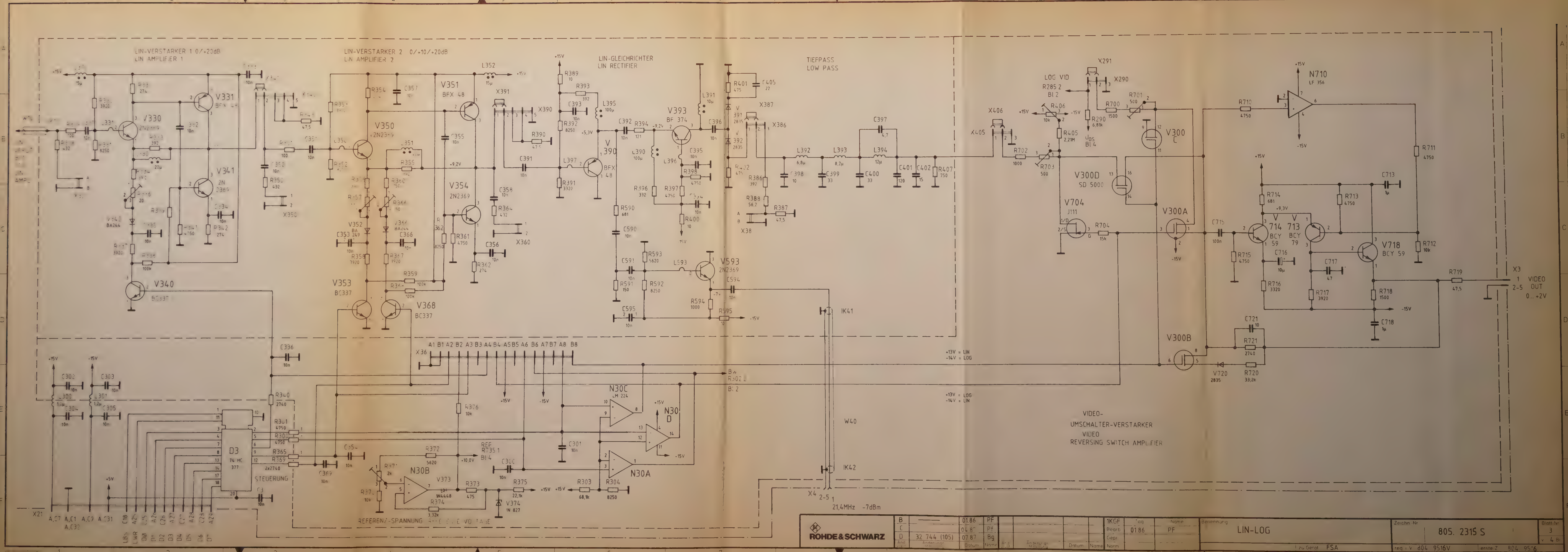
LIN-VERSTÄRKER 1 0/+20dB
LIN AMPLIFIER 1
LIN-VERSTÄRKER 2 0/+10/+20dB
LIN AMPLIFIER 2
LIN-GLEICHRICHTER
LIN RECTIFIER
TIEFPASS
LOW PASS
LOG VID
VIDEO-
UMSCHALTER-VERSTÄRKER
VIDEO
REVERSING SWITCH AMPLIFIER
STEUERUNG
REFERENZ-SPANNUNG
VIDEO OUT
0...+2V
21,4MHz -7dBm
V330
V331
V340
V341
V350
V351
BFX 48
V353
BC337
V354
2N2369
V368
BC337
V393
BF 374
V593
2N2369
V300D
SD 5000
V300A
V300B
V704
J111
N710
LF 356
V718
BCY 59
N30A
N30B
N30C
LM 224
N30D
D3
74 HC
377
ROHDE&SCHWARZ
32 744 (105)
LIN-LOG
805. 2315 S
FSA

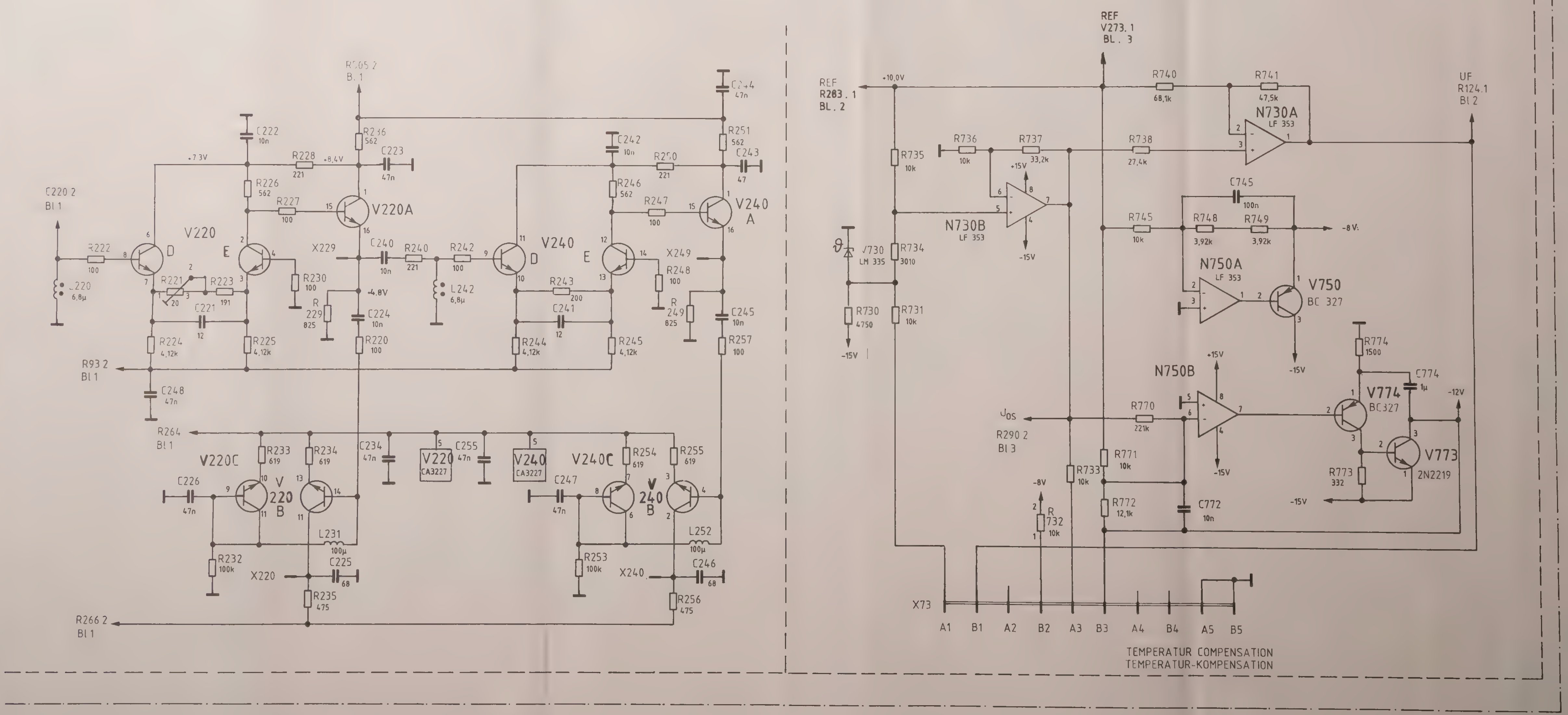

ROHDE&SCHWARZ	B C E	32765	01.86 05.86 12.87	PF PF PA	1KGF	01.86	PF	LIN-LOG	FSA	805 2315 S	4

Für diese Unterlage behalten wir uns alle Rechte vor

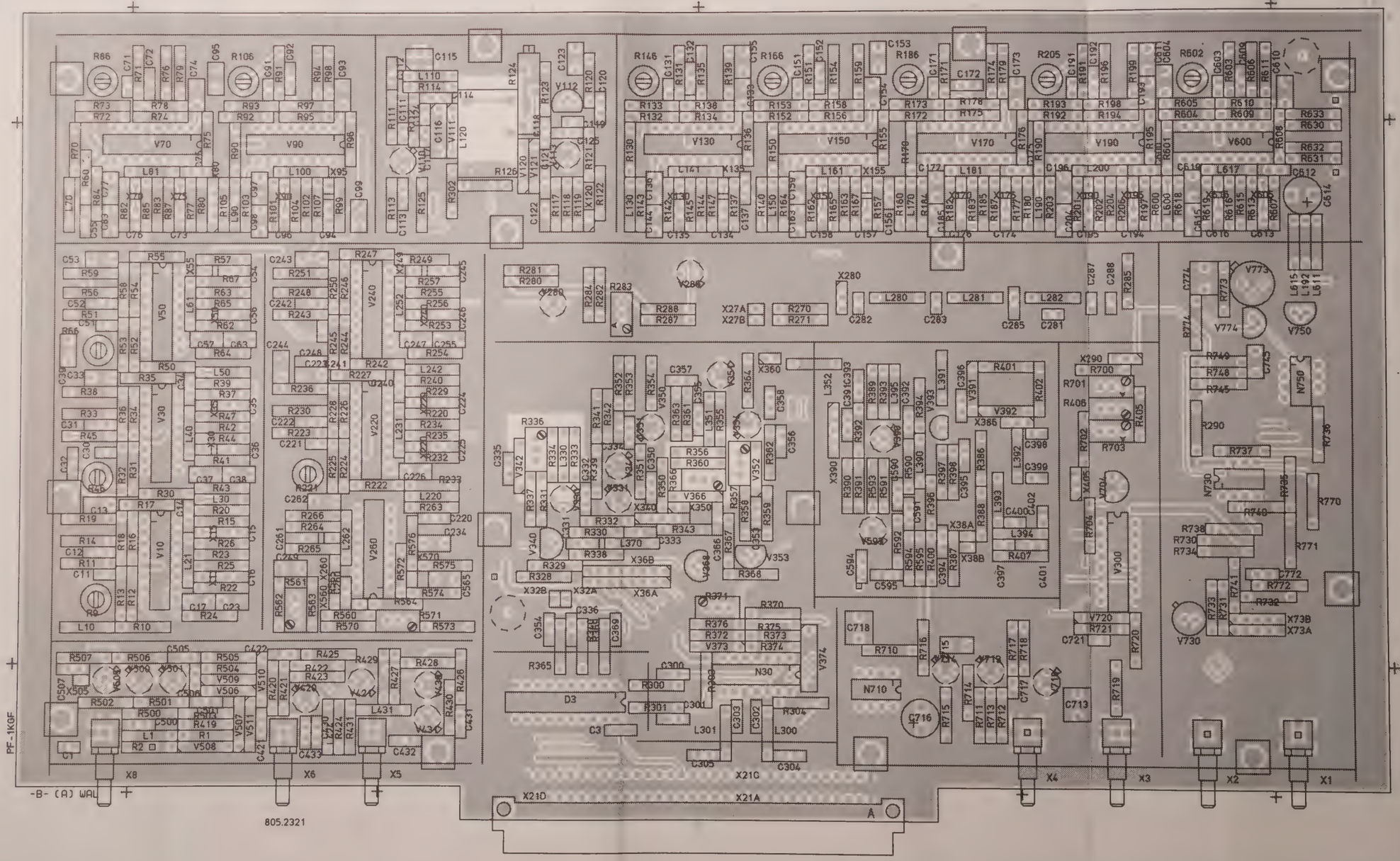

Ansicht und Leitungsführung Bauteilseite
View of tracks on component side

ACHTUNG: EGB!
Elektrostatisch gefährdete Bauelemente erfordern eine besondere Handhabung

ATTENTION ESD!
Electrostatic sensitive devices require a special handling.

(hierzu HVC 250)

VARIANTENERKLÄRUNG/VERSION
VAR 02 – GRUNDAUSFÜHRUNG/BASIC MODEL

Änd. Zust	Änderungs-Mitteilung	Tag	Name
F		06.86	PF

Maße ohne Toleranzangabe

Maßstab 1 : 1

Halbzeug, Werkstoff

1KGF	Tag	Name
Bearb.	06.86	PF
Gepr.		
Norm		

Benennung
LIN LOG
LIN LOG

Z

ROHDE&SCHWARZ

zu Gerat FSA

Zeichn.-Nr. 805.2315.01 EE

Blatt-Nr 2 v. Bl.

reg. i V. 804.9516 V erste Z.

Für diese Unterlage behalten
wir uns alle Rechte vor.

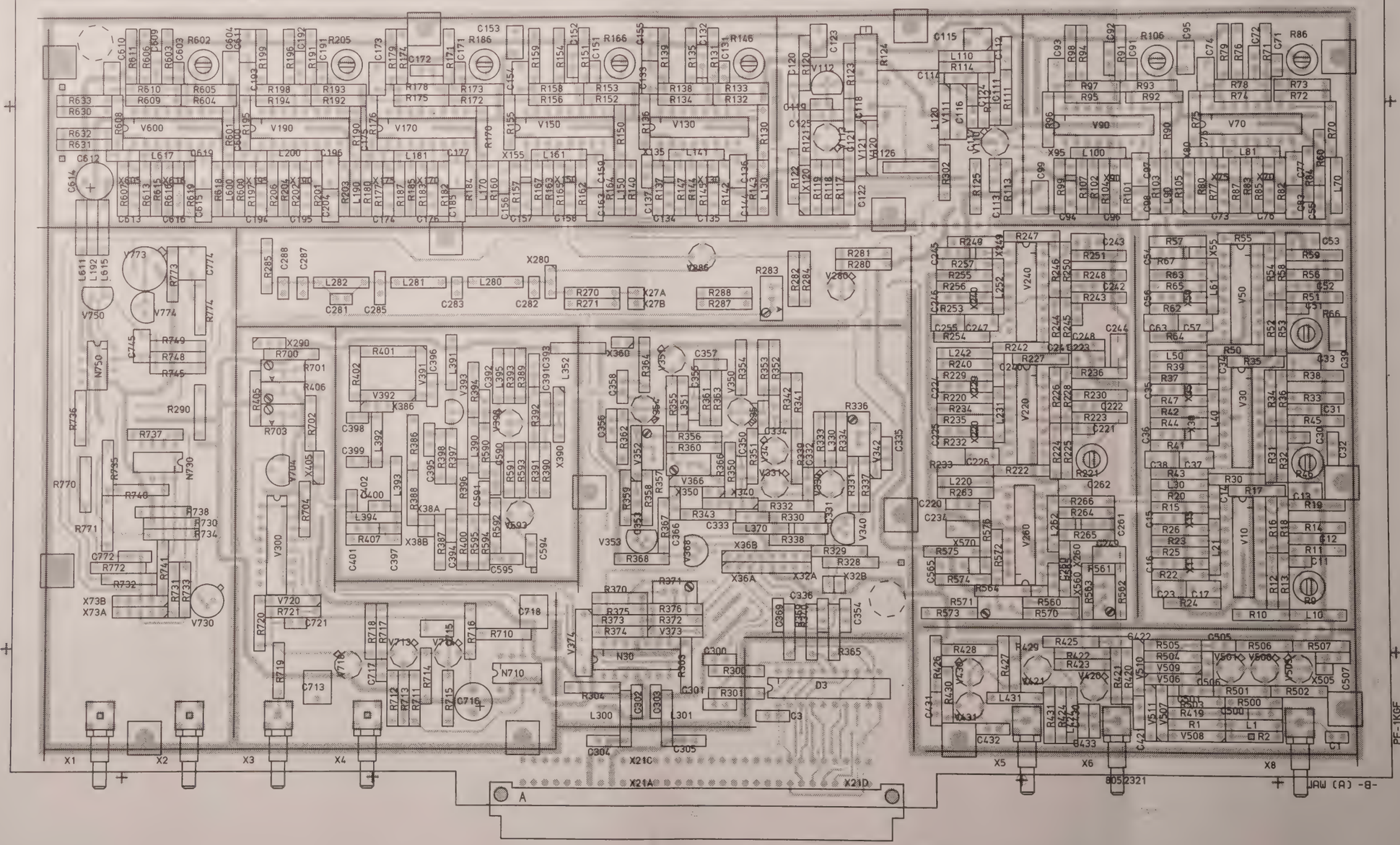

Ansicht und Leitungsführung Lötseite
View of tracks on solder side

(herzu HVC 250)

ACHTUNG: EGB!
Elektrostatisch gefährdete Bauelemente erfordern eine besondere Handhabung

ATTENTION ESD!
Electrostatic sensitive devices require a special handling.

VARIANTENERKLÄRUNG/VERSION
VAR 02 – GRUNDAUSFÜHRUNG/BASIC MODEL

Änd. Zust.	Änderungs-Mitteilung	Tag	Name
F		06.86	PF

Maße ohne Toleranzangabe

	Tag	Name
1KGF		
Bearb.	06.86	PF
Gepr.		
Norm		

ROHDE&SCHWARZ

zu Gerät FSA

Maßstab 1 : 1

Halbzeug, Werkstoff

Benennung
LIN LOG
LIN LOG
Z

Zeichn.-Nr. 805.2315.01 EE

Blatt-Nr. 3 v. Bl.

reg. i. V. 804.9516 V erste Z.

ROHDE&SCHWARZ

SERVICE DOCUMENTATION

A/D Converter

805.1319.02

Contents

		Page
6	**Service Instructions A/D Converter**	6.1
6.1	**Function Description**	6.1
6.1.1	Microprocessor Interface	6.1
6.1.2	Input Multiplexer	6.1
6.1.3	Log Scale Expander	6.1
6.1.4	Video Filter	6.2
6.1.5	Video Buffer Amplifier	6.2
6.1.6	Peak Detectors	6.2
6.1.7	Sample & Hold Amplifier	6.3
6.1.8	A/D Converter	6.3
6.1.9	Digital Peak Detectors	6.3
6.1.10	Trigger Unit	6.4
6.1.11	Clock Generator	6.4
6.1.12	Autorun Control	6.4
6.1.13	Mode Control	6.5
6.1.14	Monotony Detector	6.5
6.1.15	Digital Peak Detector Control	6.6
6.1.16	Resetting of Peak Detectors	6.6
6.2	**Testing and Adjustment**	6.8
6.2.1	Adjusting the Clock Frequency	6.8
6.2.2	Adjusting the Reference Level	6.8
6.2.3	Adjusting the Video Amplifier	6.8
6.2.4	Adjusting the Sample & Hold Offset	6.8
6.2.5	Adjusting the A/D Converter Scale	6.8
6.2.6	Adjusting the Peak Detector Offset	6.8
6.2.7	Testing the Control of Multiplexer D193	6.9
6.2.8	Testing the Triggering	6.9
6.2.9	Testing the Measurement Mode Normal	6.10
6.2.10	Testing the Log Expander and Video Output	6.10
6.2.11	Testing the Frequency Response	6.11
6.2.12	Testing the Linearity	6.12
6.3	**Troubleshooting**	6.13
6.3.1	Microprocessor Interface	6.13
6.3.2	Procedure to Locate the Faulty Assembly	6.16
6.3.2.1	Module Supplies no Data	6.16
6.3.2.2	Module Supplies Faulty Data	6.17
6.3.3	Timing Diagrams	6.23
6.3.3.1	Triggering / Clock Generator	6.23
6.3.3.2	A/D Converter	6.24
6.3.3.3	Autorun Control	6.25
6.3.3.4	Digital Peak Detectors / Control / Reset	6.26
6.3.3.5	Operating Mode Normal (Spectrum Analyzer)	6.27
	Parts lists	
	Circuit diagrams	
	Component location plans	

6 Service Instructions A/D Converter

(See circuit diagram 805.1319 S)

6.1 Function Description

The module is mainly used for analog processing and digitization of the video signal from the Lin/Log amplifier. The output voltage of the demodulator (AF) as well as all selftest voltages can be processed in addition. Important functions include scale setting, video filtering, peak detection, analog-to-digital conversion and triggering of the sweep.

The following operating modes are possible:

- Scan
- Maximum peak detection
- Minimum peak detection
- Automatic selection between maximum and minimum peak values in normal mode.

6.1.1 Microprocessor Interface

The interface to the graphics processor comprises the write ports D18, D74, D310 and D460, the read ports D264 and D266, and the DMA flip-flop D355B. Addressing via the chip select lines is as follows:

Chip select	Addressed ports	
	High byte	Low byte
LGPCS4	D266	D264
LGPCS5	D74	D18
LGPCS6	D460	D310

The write ports accept data with the rising edge of the write line (LGWR).

Data are read from the read ports in DMA mode. A DMA request is placed (LGDRQO = Low) via the flip-flop D355B as soon as a measured value is available. Low level at LGPCS4 switches through the output drivers of D264 and D266 and resets the DMA flip-flop.

Sweep trigger

The output signal SWPTRG from the trigger unit (High level following triggering) is applied to the frequency processor via X21.22B so that this starts the sweep at the time of the trigger.

6.1.2 Input Multiplexer

The signal required for further processing can be selected by D1, D2, D15, D17 and D16. In addition to the broadband video input, 23 channels are available for DC and AF signals with measuring ranges of 0 to +2 V each. They are occupied by the demodulator output (AF) and by various selftest voltages.

6.1.3 Log Scale Expander

This consists of three amplifier stages N20, N30 and N40 and the attenuating element R36, R37. In order to implement the scaling factors 10-5-2-1 dB/division, the gain of N20 and N30 can be switched from 1 to 2 in each case, and that of N40 from 1 to 2.5. The attenuating element selected by V38 extends the display range from 100 dB to 110 dB. The amplifiers refer the input signal to the 2-V reference voltage buffered by N50 so that the reference level (= upper measuring limit = 2 V) remains unchanged in each case.

The following diagram shows the transmission characteristics:

a 10 dB/div (110 dB total)
b 10 dB/div (100 dB total)
c 5 dB/div
d 2 dB/div
e 1 dB/div

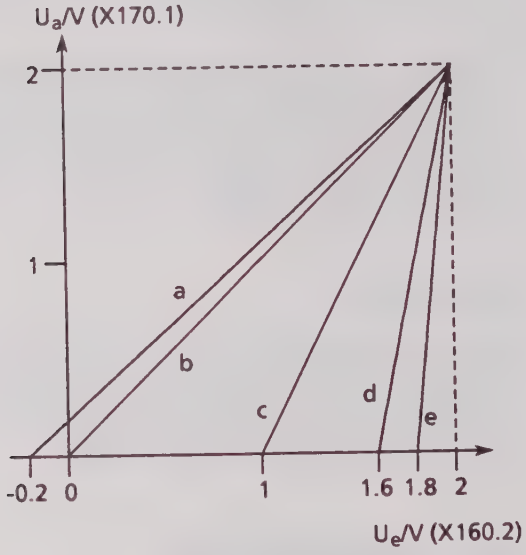

6.1.4 Video Filter

The video filter is an RC lowpass whose cutoff frequency can be adjusted from 1 Hz to 1 MHz in steps of 1-3-10. It is switched off with a video bandwidth of 3 MHz. D70 selects between two resistors and D75 can select one of seven capacitors.

6.1.5 Video Buffer Amplifier

N100 buffers the video filter and N110 decouples the video output (X21.22C) which outputs 0 to 1 V from 75 Ω. N120 amplifies the video signal by 1.5 times for further internal processing.

6.1.6 Peak Detectors

There are two peak detectors for the determination of the upper and lower peak values of the video signal. They can also detect single-shot pulses with a rise time up to 200 ns.

Maximum peak detector

The maximum peak detector has the following configuration:

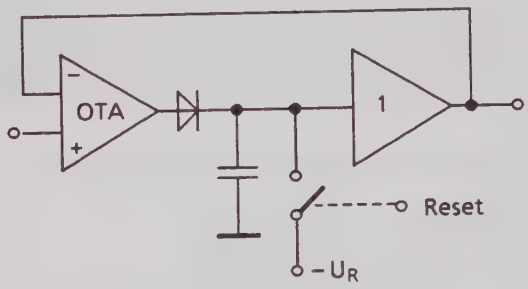

The output voltage follows a rising input voltage since the transconductance amplifier (OTA) charges the capacitor. If the input voltage then drops, the capacitor cannot be discharged and the stored peak value is available at the buffered output. The reset switch can be used to rapidly discharge the capacitor.

The OTA comprises the differential amplifier V140A/B, the cascode V141/V150 and the current mirror V140C/D. Its push-pull output charges the storage capacitor C156 via diodes V149/V151. V160 and V161 constitute the output buffer. The OTA is reset by applying a Low level to the base of V165 (LRAMAX). V162 then charges the capacitor to approx. -3 V within 50 ns.

Minimum peak detector

The minimum peak detector has the same configuration as the maximum peak detector except that the diode is reversed. The capacitor can therefore only be discharged, so that it stores the minimum peak. When resetting the OTA, the capacitor must be charged to a positive voltage above the required range. This is effected by a Low level at R189 (LRAMIN) which switches on V187 and charges C184 to approx. + 4.4 V.

6.1.7 Sample & Hold Amplifier

The sample & hold amplifier samples the signal to be digitized and holds it constant during analog-to-digital conversion.

The multiplexer D193 is located at the input of the sample & hold amplifier. This enables selection between phase (network analyzer mode), video, its maximum peak or its minimum peak.

The sample & hold amplifier has the following configuration:

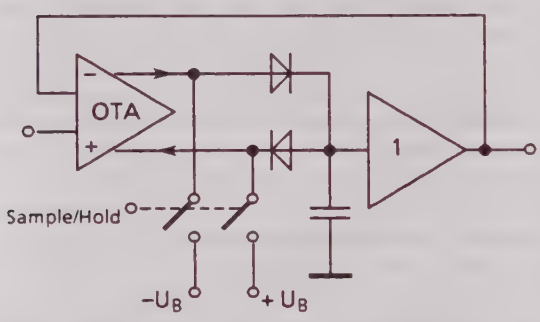

The current source and current sink are not connected to a push-pull output in the transconductance amplifier (OTA), but are output separately. The capacitor can be charged and discharged via the diodes so that the output voltage is exactly set to the input voltage. The two switches are closed during the hold phase and the OTA outputs applied to the operating voltage. The two diodes then block and the voltage stored in the capacitor is available at the buffered output.

The OTA comprises the differential amplifier V200A/B, the cascode V201/V202 and the current mirror V200C/D. C215 is charged via V203 and discharged via V204. V215/V216 form the buffer. V224 switches on by means of a Low level at V225 (SAMPLE) followed by the complementary switches V221 and V226. Diodes V203 and V204 are then blocked (hold phase). V217 and V218 block during sampling (SAMPLE = High). The maximum settling time is 0.4 µs.

6.1.8 A/D Converter

The 12-bit A/D converter operates according to the principle of successive approximation with a conversion time of 8.9 µs. It comprises the D/A converter D240, the voltage reference N280, the comparator N235 and an autorun control D237 (successive approximation register). The input voltage is buffered by N230 and converted by R233 into a current to which the negative output current of D/A converter D240.18 is added at the comparator input N235.2.

A Low level at D237.14 (LSTART) starts the conversion in synchronism with the rising edge of the 1.46-MHz clock (CLK1 at D237.13). The signal LEOC (D237.3) becomes Low as soon as the conversion has been terminated.

6.1.9 Digital Peak Detectors

In each sweep, 901 values are collected (= number of graphic pixels). Each measured value represents the video maximum (or minimum) since the last value was transferred. Since the sweep time can be up to 1980 s, the maximum period over which the peak value must be measured is 2.2 s. As a result of leakage currents, especially at higher temperatures, the analog peak detectors can only retain their voltage with the required accuracy for a few hundred µs. The two analog peak detectors are therefore sampled continuously and alternately and the digitized measured values produced at intervals of 8.9 µs applied to the digital peak detectors.

These detectors comprise a register for the maximum peak (D260, D262), a register for the minimum peak (D250, D252) and a common digital comparator (D254, D256, D258). A maximum value from the A/D converter is compared with the contents of the maximum register and only loaded into the register if it is larger. Similarly, a minimum value is only loaded into the associated register if it is smaller. The digital peak detectors are reset by unconditional loading of the registers with the existing measured value (see 6.1.15).

The registers have tristate outputs. Either the contents of the minimum or maximum register can be written into the read ports D264/D266.

6.1.10 Trigger Unit

The graphics processor resets the trigger flip-flop D340A and blocks it for as long as no measurements are to be made. The flip-flop is set by the next trigger event (SWPTRG = High) once it has been enabled and the sweep commences; the sweep is started by the frequency processor and the A/D converter module commences data acquisition.

The trigger signal is selected by multiplexer D360. It can be triggered either by rising or falling edges. The trigger threshold can be set in the video trigger and external trigger modes. The main processor then outputs a voltage between 0 and 10 V via the I/O board which is applied to the trigger unit via X21.4A (TRGLEV).

Type of trigger	Source	Signal	Threshold	Comparator
External	External (rear panel)	EXTRIG	–5 V to +5 V	N360A
Video	internal video	VIDEO	0 to 100 %	N360B
Line	Power pack	LINET	Zero-axis crossing	V385, V386
Free run	Oscillator D365A	Square-wave 1.5 MHz	—	—

6.1.11 Clock Generator

A two-phase clock with 1.46 MHz is required to operate the digital control and the A/D converter. Since sampling takes place in synchronism with the clock, the clock generator itself must be started in a defined manner by the trigger in order to prevent jitter in the case of short sweep times (zero span mode).

N390 and D365E/F constitute a Schmitt trigger RC oscillator which oscillates at 2.9 MHz. If not triggered (SWPTRG = Low), the oscillator is stopped by R390 and the flip-flops D400 reset. D400A and D400B operate as frequency dividers which are driven in opposite phase by the 2.9-MHz clock. The two 1.46-MHz clock signals CLK1 and CLK2 are then shifted in phase by 90° to each other.

6.1.12 Autorun Control

Start of measurement

The start flip-flop D340B and the clock generator are enabled following triggering. The first rising edge of CLK2 sets the start flip-flop which now enables the connection between the end-of-conversion (LEOC) and the start signal (LSTART) of the A/D converter via D335A and D320C. The first A/D conversion is started and, as soon as this has been terminated, the end-of-conversion signal immediately triggers another etc. The start signal which lasts for one clock period is also used as the sampling signal (SAMPLE) for the sample & hold amplifier following inversion by D335B. This is possible since the actual A/D conversion only starts once the LSTART pulse has disappeared.

Routing on of measured data

Depending on the operating mode, the measured values produced every 8.9 µs by the A/D converter are written into one of the two registers of the digital peak detector or ignored (see Sections 6.1.13 and 6.1.15). The load pulse (PLLOAD) for this purpose is generated by the autorun control by linking the end-of-conversion signal and CLK2 in gate D335C.

Data request

The data request is usually from the frequency processor indirectly via the YIG pretuning (FRQSTP) and is synchronous with the sweep clock. On the other hand, the graphics processor can block the signal FRQSTP via port D310 and gate D315A/B and send a data request itself, e.g. to measure a selftest voltage.

Every data request must be synchronized with the sweep since the latter must always be synchronous with the trigger or the clock. The request is therefore initially stored by D325A and a pulse (SYDRQ) is generated by D325B which coincides with the next end-of-conversion signal. The desired signal is sampled at this point. The flip-flop D330A delays the synchronous data request again by a complete conversion period of the A/D converter. The signal LDSDRQ then becomes Low for one clock period if the requested measured value is digitized. The flip-flop D345 is thus reset, the output of gate D350C becomes High and switches the load pulse of the peak detector registers (PLLOAD) via D335D to the read ports D264/D266 by means of DLLOAD.

A peak detector register then accepts the measured value from the A/D converter if applicable and the contents of the register are then transmitted to the read port (D335D inverts PLLOAD).

Direct memory access (DMA)

The load pulse for the read ports also sets the DMA flip-flop D355B. The DMA request (LGDRQO = Low) triggered by this causes the graphics processor to fetch the measured value and resets the DMA flip-flop again at the same time (LGPCS4 = Low).

Zero span

When operating with zero span (YIG oscillator at fixed frequency), the modulation of a carrier can be displayed as with a storage oscilloscope. With a sampling period of 8.9 µs, the 901 measured values/sweep can only be collected in a sweep time of 8 ms. Correspondingly fewer measured values are recorded with shorter sweep times. In order to achieve maximum sampling rates, the data requests with the associated synchronization are omitted. A High level is then output at gate D350C by means of a Low level at port D310.12, thus enabling loading of the read ports including DMA requests.

6.1.13 Mode Control

The mode control defines the operating mode of the module based on the write port D460. The main task is controlling of multiplexer D193, i.e. selecting the signal to be sampled.

The multiplexer remains at a fixed setting in maximum peak, minimum peak, video scanning and phase scanning modes. The graphics processor can select the corresponding signal via port D460 and gate D456 independent of the other parts of the circuit. D456 has open-collector outputs for 15 V. The network R450 - R461 and C451 - C461 handles the level conversion for the DMOS FETs in the multiplexer.

The flip-flop D440B handles switching between minimum and maximum peak in normal mode. This enables simultaneous measurement of minimum and maximum peaks as required for displaying the noise bandwidth. D440B toggles following each A/D conversion since it is triggered by the end-of-conversion signal (LEOC). The minima and maxima are stored in the peak registers. The noise is displayed by alternate output of the minima and maxima on the screen. A minimum and a maximum must therefore be transferred alternately following each data request. This is ensured by flip-flop D440A which toggles following each data request (LDSDRQ). The flip-flop D440B is set or reset (SYDRQ) depending on the state of D440A and the corresponding signal is therefore switched through for sampling.
(Note: D440B ignores its clock signal LEOC in this case.)

To prevent a noise-free signal from being displayed in the form of a fine zig-zag line, only the maximum peak is output as the measured value in this case. The output of gate D480C can only become Low if the monotony detector (Section 6.1.14) detects noise, i.e. VDROSE = High and VDFELL = High. This leads to resetting of D440B and then selection of the minimum.

6.1.14 Monotony Detector

Minima and maxima should only be alternately displayed if a noisy video signal is present. Noise is present if the video signal between two data requests, i.e. between two points of the curve, is not monotonous, i.e. it rises and falls.

In the case of falling video signal, its voltage is lower than the output voltage of the maximum peak detector. The comparator N420A is then triggered and sets the flip-flop D430A. In the case of a rising video signal, its voltage is higher than the output voltage of the minimum peak detector. In this case, the output of N420B becomes Low and sets N430B. Noise is present if both flip-flops are set upon a data request and the minimum is selected if applicable (flip-flop D440A). The monotony detector is always reset following the data request (D410.8).

6.1.15 Digital Peak Detector Control

This is used to implement the peak detector function in conjunction with the peak registers and the digital comparator (cf. 6.1.9).

The flip-flop D330B delays the signals MAXSEL and MINSEL, which are logically identical with the associated multiplexer control signals, by one A/D conversion time. Its status indicates whether the measured value just determined originates from the analog minimum peak or maximum peak detector. Its outputs (LOCMIN, LOCMAX) switch through the tristate drivers of the corresponding peak register so that the digital comparator can compare the measured value with the register contents. The maximum register should only be loaded if the new measured value is larger than the stored value. In this case GT = High, and the gate D480A is enabled via D475A and D455A. The load pulse PLLOAD is thus applied to the register (LADMAX). In a similar manner, the minimum register is only loaded if the new measured value is smaller, i.e. LT = High.

The two digital peak detectors ca be reset via inputs LRDMAX and LRDMIN (see Section 6.1.16). Resetting in this case means setting to the current value. The effects of the comparator outputs LT and GT are cancelled to this end simply by setting flip-flops D470. The next measured value is thus loaded unconditionally. The load pulse is linked to the outputs of flip-flop D330B at gates D480A/B so that the correct register is loaded even when resetting. Feedback of the load pulses to the clock inputs of D470 causes the respective flip-flop itself to be reset when the register is reset and thus makes loading dependent on the comparator.

In the sampling modes, the mode control cancels the effect of the comparator by means of a High level at the output of D475C.

6.1.16 Resetting of Peak Detectors

The digital peak detectors are only reset after a measured value has been transferred to the graphics processor because they always contain the peak value since the last measured value. The digital minimum peak detector is reset each time a measured value is transferred. By delaying LDSDRQ by one clock period, flip-flop D414B generates a Low pulse after the measured value has been transferred. This pulse is applied via D410A to flip-flop D470B (cf. 6.1.15) and to the flip-flops D430 (cf. 6.1.14).

The digital maximum peak detector is only reset if a maximum has been transferred. This is important because, with a large span and a small IF bandwidth, an RF signal enables the video to rise to its level and fall again within two data requests. The monotony detector detects noise in this case and the minimum is selected if applicable (D440A set). Since the digital maximum peak detector is not reset in such a case, the spectral line may be displayed offset by at least 1 pixel. The additional gate D350B only allows the reset pulse to pass if LOCMIN = High.

Since the trigger signal SWPTRG is Low before a sweep, both digital peak detectors are reset following the start of the sweep.

The analog peak detectors are reset in accordance with the digital peak detectors, but by one A/D converter period earlier in each case because analog peak detection for the requested measured value has been terminated at this time. (The digital peak detector must still wait for A/D conversion.)

With the synchronized data request (Low pulse at D325.8 = LSYDRQ), either the maximum peak detector (MAXSEL = High) or the minimum peak detector (MAXSEL = Low) is scanned. The flip-flop D355A is set at the Low - High transition of LSYDRQ and reset again after approx. 150 ns by clock LCLK2. The pulse resulting at the flip-flop output is used to reset the analog peak detectors. It is always applied to the minimum peak detector (LRAMIN) via D410C, but only to the maximum peak detector (LRAMAX) via D415D and D410D if this has been sampled previously (MAXSEL = High).

Both analog peak detectors are held at reset prior to the trigger event (SWPTRG = Low).

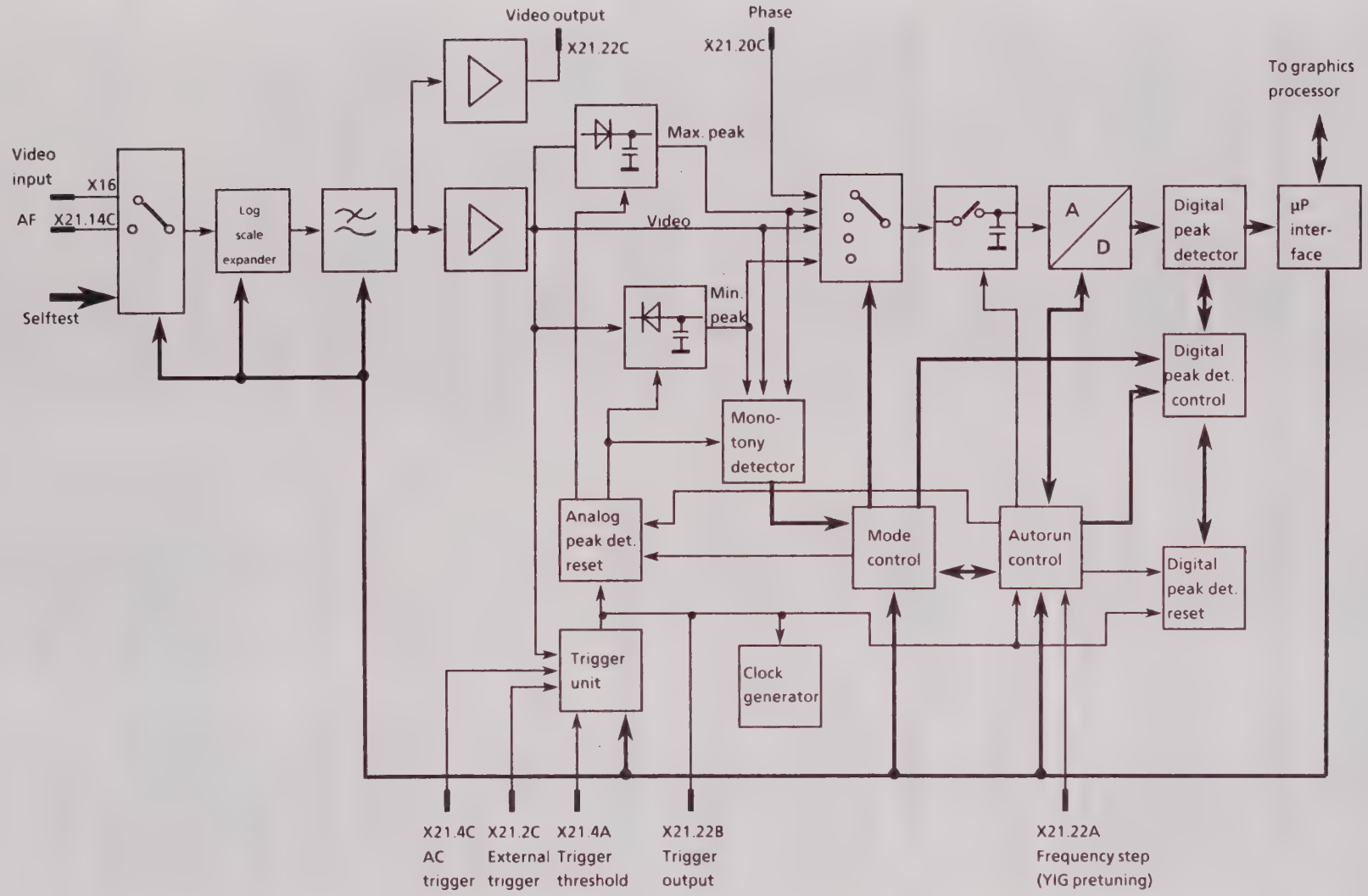

Fig. 6-1 Block diagram of A/D converter module

6.2 Testing and Adjustment

The main processor, graphics and I/O board modules must also be inserted. The sequence of adjustments 6.2.2 to 6.2.6 must be adhered to.

6.2.1 Adjusting the Clock Frequency

- Instrument settings:
  Preset, spectrum analysis, sweep time 1000 s (measurement with sweep).
- Connect frequency counter to X400.2 at high impedance.
- The frequency must be exactly 1.4625 MHz ± 15 kHz.

  Adjustment: adjust frequency to 1.4625 MHz ± 3 kHz using R399.

6.2.2 Adjusting the Reference Level

- Instrument settings:
  Preset, spectrum analysis, level range 10 dB.
- Apply DC voltage of 2 V ± 0.7 mV to X16.
- Connect multimeter to X170.1.
- Voltage at X170.1 must be 2 V ± 20 mV.

  Adjustment: adjust voltage to 2 V ± 4 mV using R57.

6.2.3 Adjusting the Video Amplifier

- Instrument settings:
  Preset, spectrum analysis.
- Connect multimeter to X130.1.

a) Video offset

- Connect 0 V to X16 (short-circuit or 50-Ω terminator, not open-circuited).
- The voltage at X130.1 must be 0 ± 2 mV.

  Adjustment: adjust voltage to 0 ± 0.5 mV using R123.

b) Video gain

- Connect DC voltage of 2 V ± 0.7 mV to X16.
- The voltage at X130.1 must be 3 V ± 3 mV.

  Adjustment: adjust voltage to 3 V ± 1 mV using R125.

6.2.4 Adjusting the Sample & Hold Offset

- Instrument settings:
  Preset, spectrum analysis, reference level 0 dBm, zero span, marker activated.
- Connect DC voltage of 4 mV ± 0.7 mV to X16.
- The level display of the marker must be –99.8 dBm ± 0.1 dB.

  Adjustment: adjust marker display to –99.8 dBm ± 0.03 dB using R207 with the module closed.

6.2.5 Adjusting the A/D Converter Scale

- Instrument settings:
  Preset, spectrum analysis, reference level 0 dBm, zero span, marker activated.
- Connect DC voltage of 2 V ± 0.7 mV to X16.
- The level display of the marker must be 0 dBm ± 0.1 dB.

  Adjustment: adjust marker display to 0 dBm ± 0.03 dB using R244 with the module closed.

6.2.6 Adjusting the Peak Detector Offset

a) Maximum peak detector

- Instrument settings:
  Preset, spectrum analysis, reference level 0 dBm, maximum peak, marker activated.
- Connect DC voltage of 2 V ± 0.7 mV to X16.
- The level display of the marker must be 0 dBm ± 0.1 dB.

  Adjustment: adjust marker display to 0 dBm ± 0.03 dB using R143 with the module closed.

b) Minimum peak detector

- Instrument settings:
  Preset, spectrum analysis, reference level 0 dBm, minimum peak, marker activated.

- Connect DC voltage of 4 mV ± 0.7 mV to X16.
- The level display of the marker must be –99.8 dBm ± 0.1 dB.

  Adjustment: adjust marker display to –99.8 dBm ± 0.03 dB using R175 with the module closed.

6.2.7 Testing the Control of Multiplexer D193

- Measure the gate voltages of the four MOS FETs of D193 at X450.1-4 using a multimeter.

L means voltage ≤ –0.8 V (typ. –1.15 V)
H means voltage ≥ +9.0 V (typ. +10.7 V)

Instrument settings: Preset	Voltage at X450, pin 1 2 3 4
Spectrum analysis, sampling	L H L L
Spectrum analysis, minimum peak	L L H L
Spectrum analysis, maximum peak	L L L H

6.2.8 Testing the Triggering

a) Free run

- Instrument settings:
  Preset, spectrum analysis, (trigger free run).
- The following signal at X21.16C should be obtained on the oscilloscope with the sweep running:

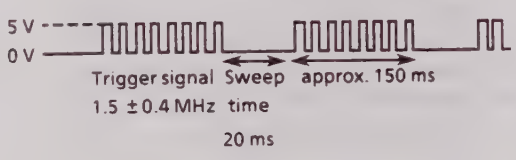

b) Line

- Instrument settings:
  As in a), but trigger line/rise.
- The following signals should be obtained on the oscilloscope with the sweep running:

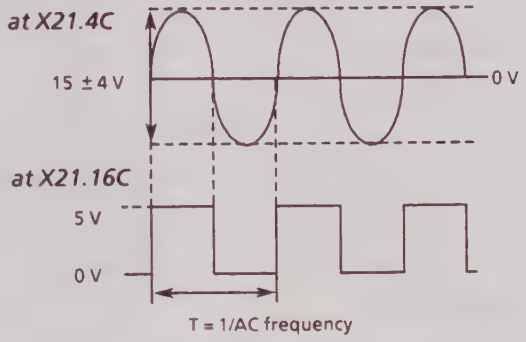

- Instrument settings:
  Falling trigger edge.
- The phase of the trigger signal at X21.16C must be reversed.

c) External

- Instrument settings:
  As in a), but trigger external/rise.
- Connect a sinewave signal of 3.9 V_{rms} and 50 Hz to the external trigger input (rear panel) or to X21.2C.
- The following signals should be obtained on the oscilloscope with the sweep running:

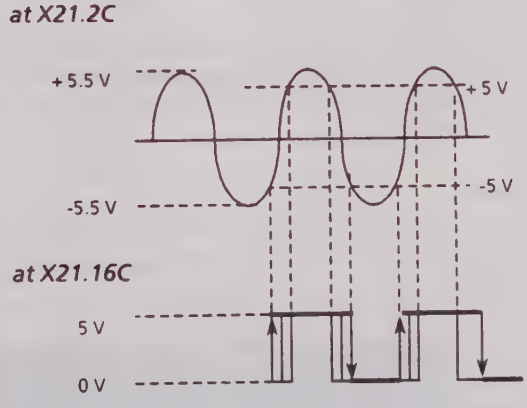

- It must be possible to set the trigger threshold between -5 V and +5 V.
- Instrument settings:
  Falling trigger edge.
- The phase of the trigger signal at X21.16C must be reversed.

d) Video

- Instrument settings:
  As in a), but trigger video/rise.
- Connect a sinewave signal of 0.778 V_{rms} and 50 Hz plus 1 V DC voltage offset to X16.
- The following signals should be obtained on the oscilloscope with the sweep running:

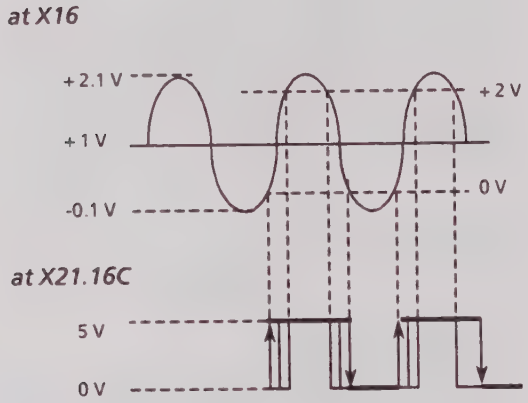

- It must be possible to set the trigger threshold between 0 V and +2 V.
- Instrument settings: Falling trigger edge.
- The phase of the trigger signal at X21.16C must be reversed.

6.2.9 Testing the Measurement Mode Normal

a) Envelope curve display

- Instrument settings: Preset, spectrum analysis.
- Connect a sinewave signal of 0.8 V_{pp} at 100 kHz plus 1-V DC voltage offset to X16.
- The following display should appear on the screen:

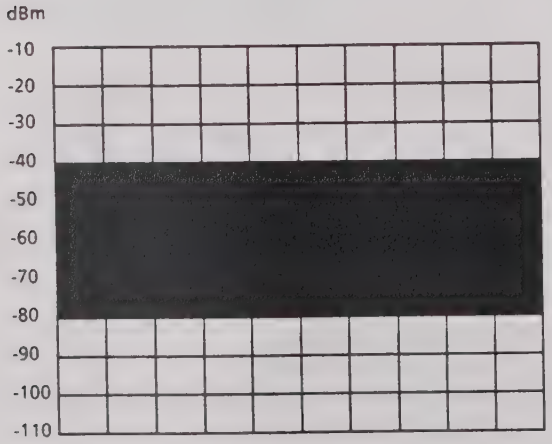

b) Detection of short single pulses

- Instrument settings:
  Preset, spectrum analysis, sweep time 20 s.
- Connect a squarewave signal of 0 to 1.5 V with 2 s period and 2 µs pulse width to X16.

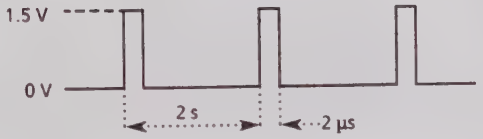

- The following display should appear on the screen:
  (Note: a stationary display with the pulses on the graticule lines is obtained by triggering at the video.)

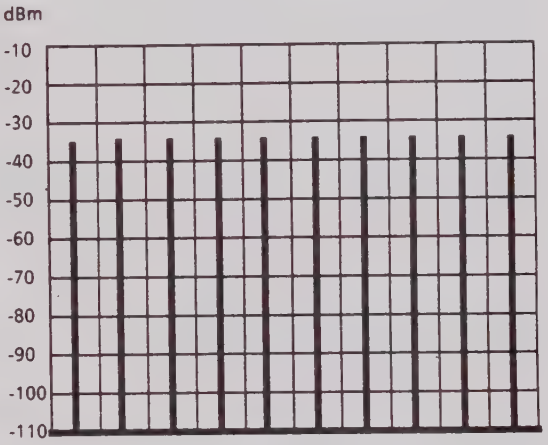

6.2.10 Testing the Log Expander and Video Output

- Instrument settings:
  Preset, spectrum analysis, reference level 0 dBm, marker activated.
- Connect adjustable DC voltage source to X16.
- Connect multimeter (1 V_{DC}) to X21.22C or video output (rear panel).

- Carry out the following test sequence:

Instrument setting: level range	Voltage at X16 ±0.7 mV in each case	Measure level with marker. Nominal value ±0.1 dB	Measure voltage at video output. Nominal value ±15 mV
110 dB	–0.196 V 2.000 V	–109.8 dBm 0.0 dBm	1.8 mV 1 V
100 dB	0.004 V 2.000 V	–99.8 dBm 0.0 dBm	2 mV 1 V
50 dB	1.004 V 2.000 V	–49.8 dBm 0.0 dBm	4 mV 1 V
20 dB	1.604 V 2.000 V	–19.8 dBm 0.0 dBm	10 mV 1 V
10 dB	1.804 V 2.000 V	–9.8 dBm 0.0 dBm	20 mV 1 V

6.2.11 Testing the Frequency Response

a) Frequency response flatness with video filter switched off (VBW = 3 MHz)

- Instrument settings:
  Preset, spectrum analysis, video bandwidth 3 MHz.
- Connect function generator to X16.
- Connect AC voltmeter to X130.1. The capacitive load at X130.1 should not exceed 50 pF.
- Measure the frequency response at each of the following four settings:

Instrument setting: level range	Function generator setting	
	Sinewave rms	DC offset
100 dB	0.50 V	+1.0 V
50 dB	0.25 V	+1.5 V
20 dB	0.10 V	+1.8 V
10 dB	0.05 V	+1.9 V

The frequency response should be as follows:

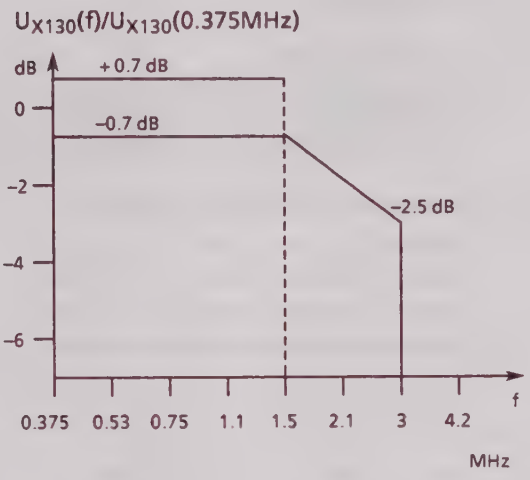

b) Cutoff frequencies of the video filter

- Instrument settings:
  Preset, spectrum analysis, video trigger.
- Connect function generator to X16 and set to: sinewave, 300 Hz, 0.5 V_{rms} (1.41 V_{pp}) ±1%, DC voltage offset +1 V ±10%.
- Adjust trigger threshold on instrument such that a stationary display with 6 cycles of the sinewave signal appears on the screen. The amplitude is approx. 7.1 divisions peak-to-peak.
- Carry out the following test sequence:

Instrument setting		Function generator setting. Frequency ±2%	Signal amplitude on screen. Nominal value
Sweep time	Video bandwidth		
4.0 s	1 Hz	1 Hz	
1.3 s	3 Hz	3 Hz	
400 ms	10 Hz	10 Hz	
140 ms	30 Hz	30 Hz	
40 ms	100 Hz	100 Hz	5 +0.4/
20 ms	300 Hz	300 Hz	–0.5
20 ms	1 kHz	1 kHz	divisions
500 ms	3 kHz	3 kHz	peak-to peak
500 ms	10 kHz	10 kHz	in each case
500 ms	30 kHz	30 kHz	
500 ms	100 kHz	100 kHz	
500 ms	300 kHz	300 kHz	
500 ms	1 MHz	1 MHz	

6.2.12 Testing the Linearity

a) Sampling mode

- Instrument settings:
  Preset, spectrum analysis, sampling, reference level 0 dBm, marker activated.
- Connect adjustable DC voltage source to X16.
- Carry out the following test sequence:

Voltage at X16 in V; ±0.7 mV in each case	Marker display in dBm, nominal value ±0.1 dB
0.0	–100
0.2	–90
0.4	–80
0.6	–70
0.8	–60
1.0	–50
1.2	–40
1.4	–30
1.6	–20
1.8	–10
2.0	0

b) Peak detect mode

- Instrument settings:
  As in a), except maximum peak.
- Carry out test sequence as in a).

An adjustment error is present if the tolerances at the full-scale values are exceeded (Sections 6.2.2 to 6.2.6).

6.3 Troubleshooting

6.3.1 Microprocessor Interface

Correct control of the module is a precondition for the following. It is therefore recommendable in the event of a fault to first test the contents of the write ports D18, D74, D310 and D460. The following table provides information on the various operating modes and settings.

GDAT XX														Function
D460								D310						
15	14	13	12	11	10	9	8	7	6	5	4	3	2	1	0	
																Spectrum analyzer modes:
1	1	0	1	0	0											Sampling
0	1	1	1	0	0											Maximum peak
1	0	1	1	0	0											Minimum peak
1	1	1	1	1	0											Normal
																Address flip-flop:
						0	1									Preset and disable
						1	0									Clear and disable
						1	1									Enable (status with sweep)
								0	↓	1	1					Data request (only selftest)
								1	1	1	1					Enable external data request (normal mode)
								X	X	1	0					Continuous data request (only span 0 and ST < 10 ms)
																Trigger flip-flop:
												0				Preset and disable trigger
												1				Enable trigger (status with sweep)
																Trigger slope:
													0			Fall
													1			Rise
																Trigger source:
														0	0	External
														0	1	Video
														1	0	Line
														1	1	Free run

GDAT XX																Function
D74								D18								
15	14	13	12	11	10	9	8	7	6	5	4	3	2	1	0	
																Video filter cutoff frequency:
0	0	0	0													1 Hz
0	0	0	1													3 Hz
0	0	1	0													10 Hz
0	0	1	1													30 Hz
0	1	0	0													100 Hz
0	1	0	1													300 Hz
0	1	1	0													1 kHz
1	0	0	1													3 kHz
1	0	1	0													10 kHz
1	0	1	1													30 kHz
1	1	0	0													100 kHz
1	1	0	1													300 kHz
1	1	1	0													1 MHz
1	1	1	1													3 MHz
																Scale (log. expander)
				0	0	0	0									110 dB total (10 dB/div)
				1	0	0	0									10 dB/div + linear
				1	0	1	0									5 dB/div
				1	1	1	0									2 dB/div
				1	1	1	1									1 dB/div
				0	1	1	1									0.1 dB/div

GDAT XX																Function
D74								D18								
15	14	13	12	11	10	9	8	7	6	5	4	3	2	1	0	
																Input multiplexer:
								0	0	1	1	0	0	0	0	GND
								0	0	1	1	0	0	0	1	ST + VCC
								0	0	1	1	0	0	1	0	ST + 5 V *
								0	0	1	1	0	0	1	1	ST + 12 V
								0	0	1	1	0	1	0	0	ST + 85 V
								0	0	1	1	0	1	0	1	STB
								0	0	1	1	0	1	1	0	STG
								0	0	1	1	0	1	1	1	STR
								0	1	1	1	0	0	0	0	STLSGI
								0	1	1	1	0	0	0	1	STLSGO
								0	1	1	1	0	0	1	0	CISPR
								0	1	1	1	0	0	1	1	STTEMP
								0	1	1	1	0	1	0	0	STIDF1
								0	1	1	1	0	1	0	1	STL1F1
								0	1	1	1	0	1	1	0	STL2F1
								0	1	1	1	0	1	1	1	AF
								1	0	1	0	1	0	0	0	UA0
								1	0	1	0	1	0	0	1	UA1
								1	0	1	0	1	0	1	0	UA2
								1	0	1	0	1	0	1	1	UA3
								1	0	1	0	1	1	0	0	ST -15 V
								1	0	1	0	1	1	0	1	ST -5 V
								1	0	1	0	1	1	1	0	ST + 5 V
								1	0	1	0	1	1	1	1	ST + 15 V
								1	1	0	1	1	0	0	0	VIDEO

6.3.2 Procedure to Locate the Faulty Assembly

(also refer to block diagram)

6.3.2.1 Module Supplies no Data

No DMA request, LGDRQO (X21.17B) constantly at High level.

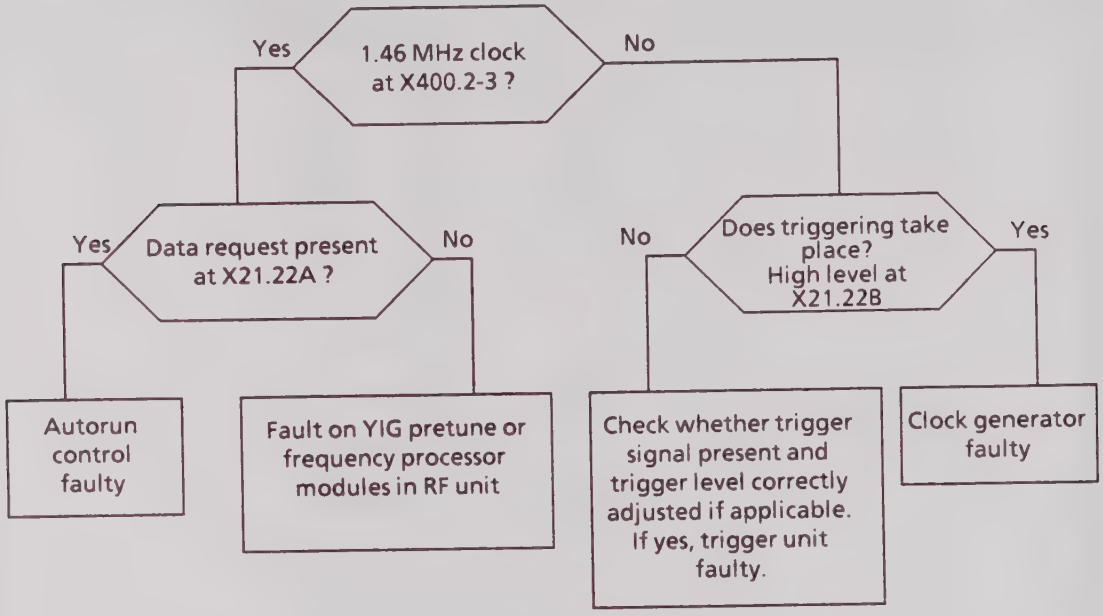

6.3.2.2 Module Supplies Faulty Data *)

*) An adjustment error may be the reason if the deviations are only small (up to several percent).

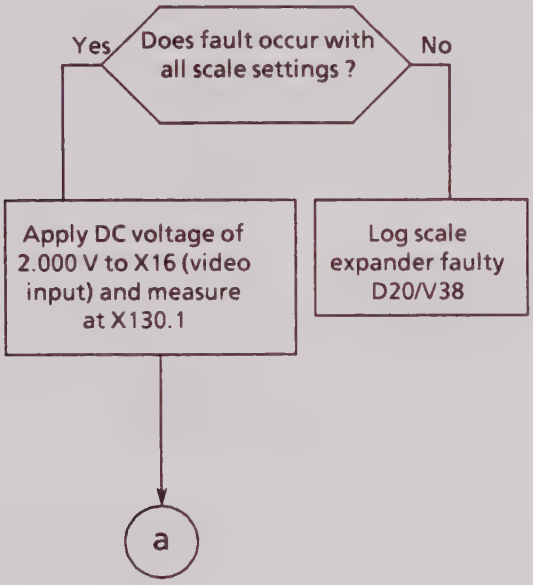

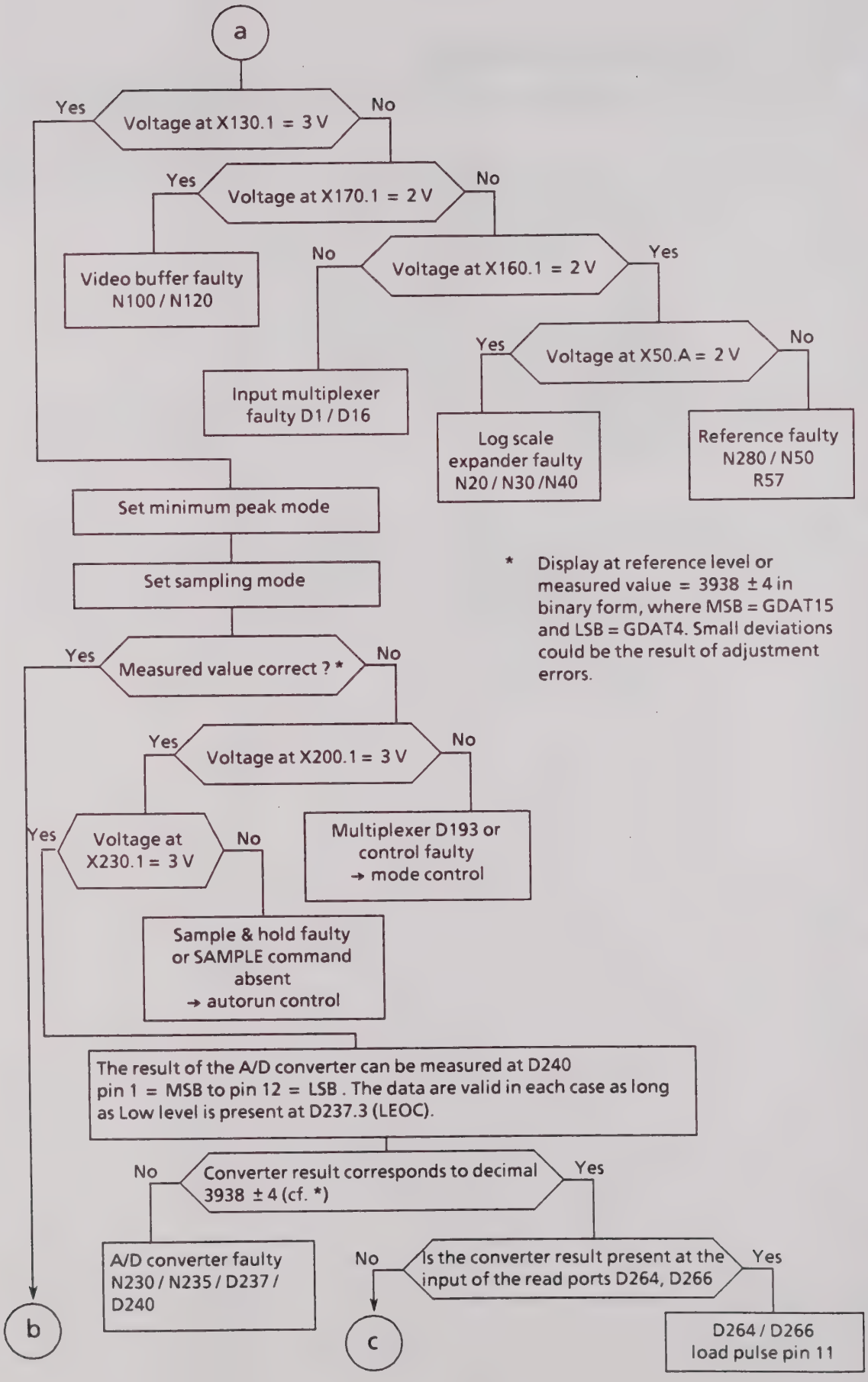

* Display at reference level or measured value = 3938 ± 4 in binary form, where MSB = GDAT15 and LSB = GDAT4. Small deviations could be the result of adjustment errors.

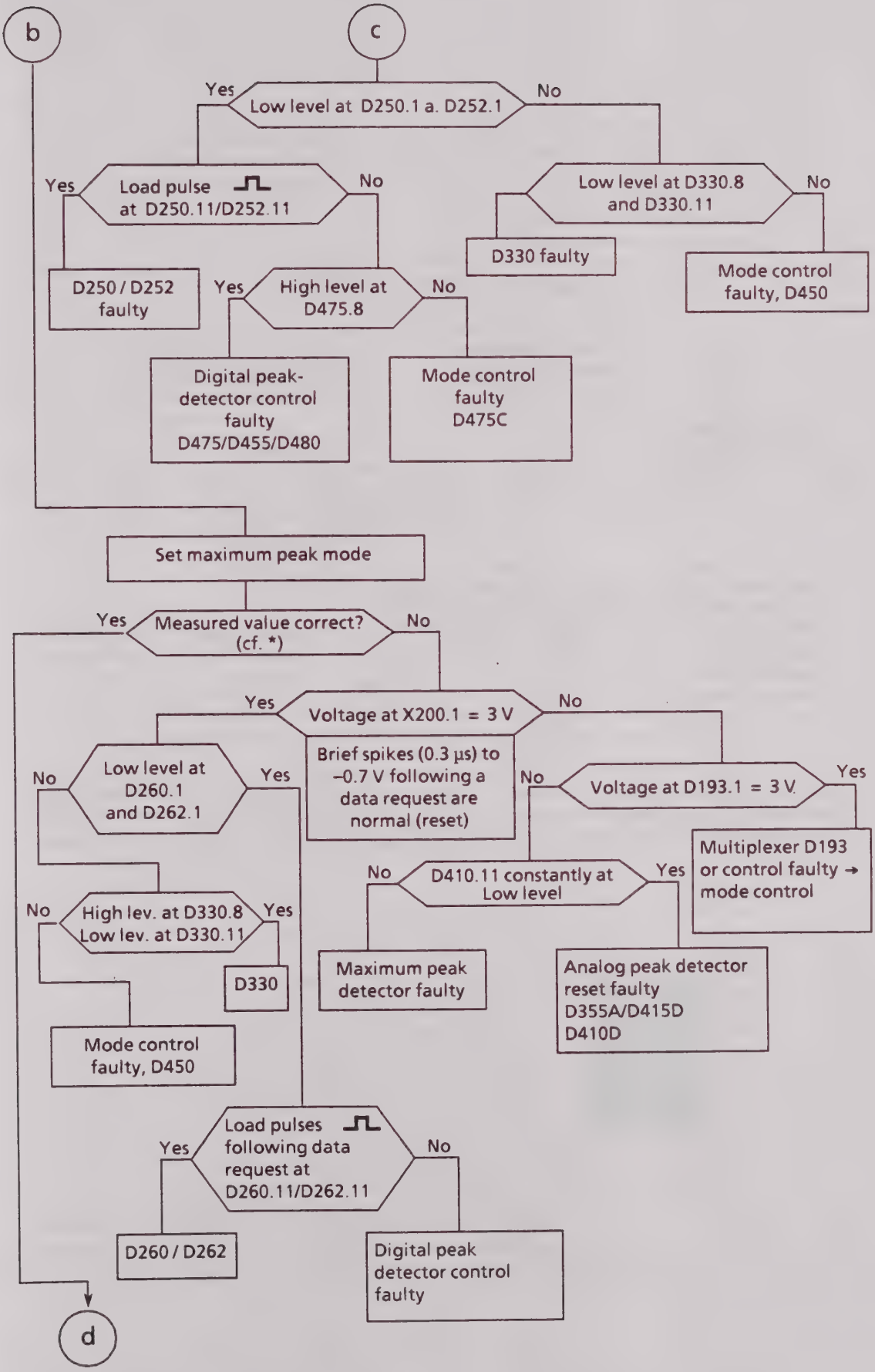
b
c
Yes
Low level at D250.1 a. D252.1
No
Yes
Load pulse at D250.11/D252.11
No
Low level at D330.8 and D330.11
No
D330 faulty
Mode control faulty, D450
D250 / D252 faulty
Yes
High level at D475.8
No
Digital peak-detector control faulty D475/D455/D480
Mode control faulty D475C
Set maximum peak mode
Yes
Measured value correct? (cf. *)
No
Yes
Voltage at X200.1 = 3 V
No
No
Low level at D260.1 and D262.1
Yes
Brief spikes (0.3 µs) to –0.7 V following a data request are normal (reset)
No
Voltage at D193.1 = 3 V
Yes
Multiplexer D193 or control faulty → mode control
No
D410.11 constantly at Low level
Yes
No
High lev. at D330.8 Low lev. at D330.11
Yes
D330
Mode control faulty, D450
Maximum peak detector faulty
Analog peak detector reset faulty D355A/D415D D410D
Load pulses following data request at D260.11/D262.11
Yes
No
D260 / D262
Digital peak detector control faulty
d

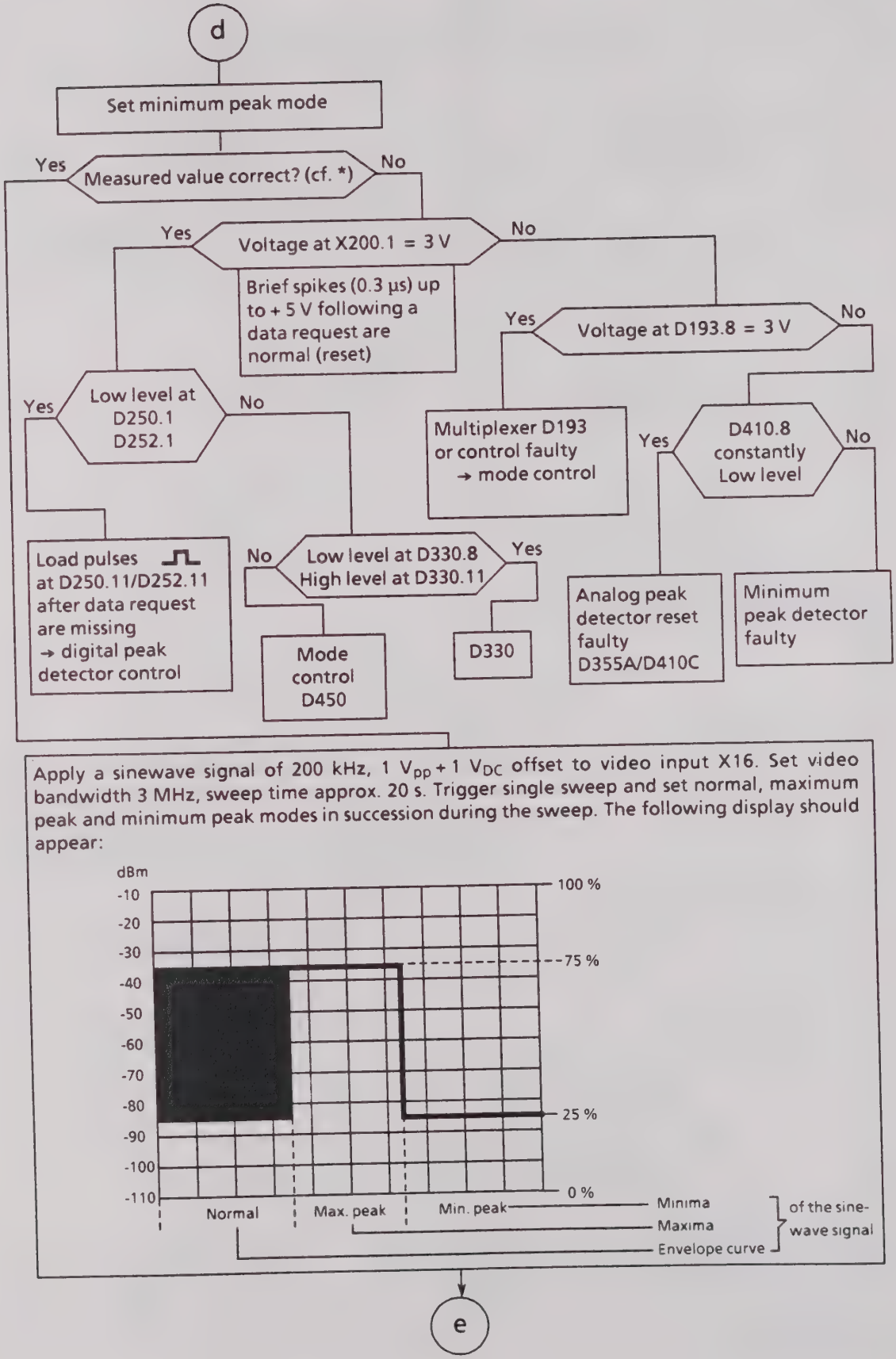
d
Set minimum peak mode
Yes
Measured value correct? (cf. *)
No
Yes
Voltage at X200.1 = 3 V
No
Brief spikes (0.3 µs) up to + 5 V following a data request are normal (reset)
Yes
Voltage at D193.8 = 3 V
No
Yes
Low level at D250.1 D252.1
No
Multiplexer D193 or control faulty → mode control
Yes
D410.8 constantly Low level
No
Load pulses at D250.11/D252.11 after data request are missing → digital peak detector control
No
Low level at D330.8 High level at D330.11
Yes
Analog peak detector reset faulty D355A/D410C
Minimum peak detector faulty
Mode control D450
D330
Apply a sinewave signal of 200 kHz, 1 V_{pp} + 1 V_{DC} offset to video input X16. Set video bandwidth 3 MHz, sweep time approx. 20 s. Trigger single sweep and set normal, maximum peak and minimum peak modes in succession during the sweep. The following display should appear:
dBm
-10
-20
-30
-40
-50
-60
-70
-80
-90
-100
-110
100 %
75 %
25 %
0 %
Normal
Max. peak
Min. peak
Minima
Maxima
Envelope curve
of the sine-wave signal
e

e

Amplitude in all three modes symmetrically too small

Yes → Video bandwidth insufficient → video filter

No → Maximum with max. peak faulty

Yes → Maximum peak detector does not oscillate or over-oscillates

No → Minimum with min. peak faulty

Yes → Minimum peak detector does not oscillate or over-oscillates

No → No or incomplete envelope curve with Normal mode

Yes → Monotony detector (N420/D430) Mode control (D440A,B D450A,D/D445A,B/D480C/D320F)

No

Apply squarewave pulses with the following form to video input X16:

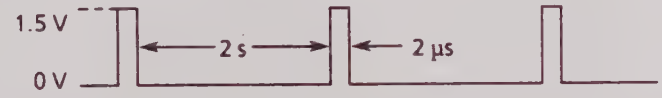

Video bandwidth 3 MHz

Sweep time 20 s

The following display should appear with normal and maximum peak:

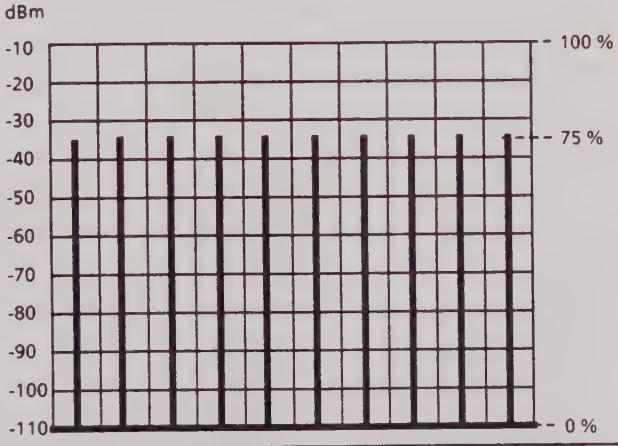

f

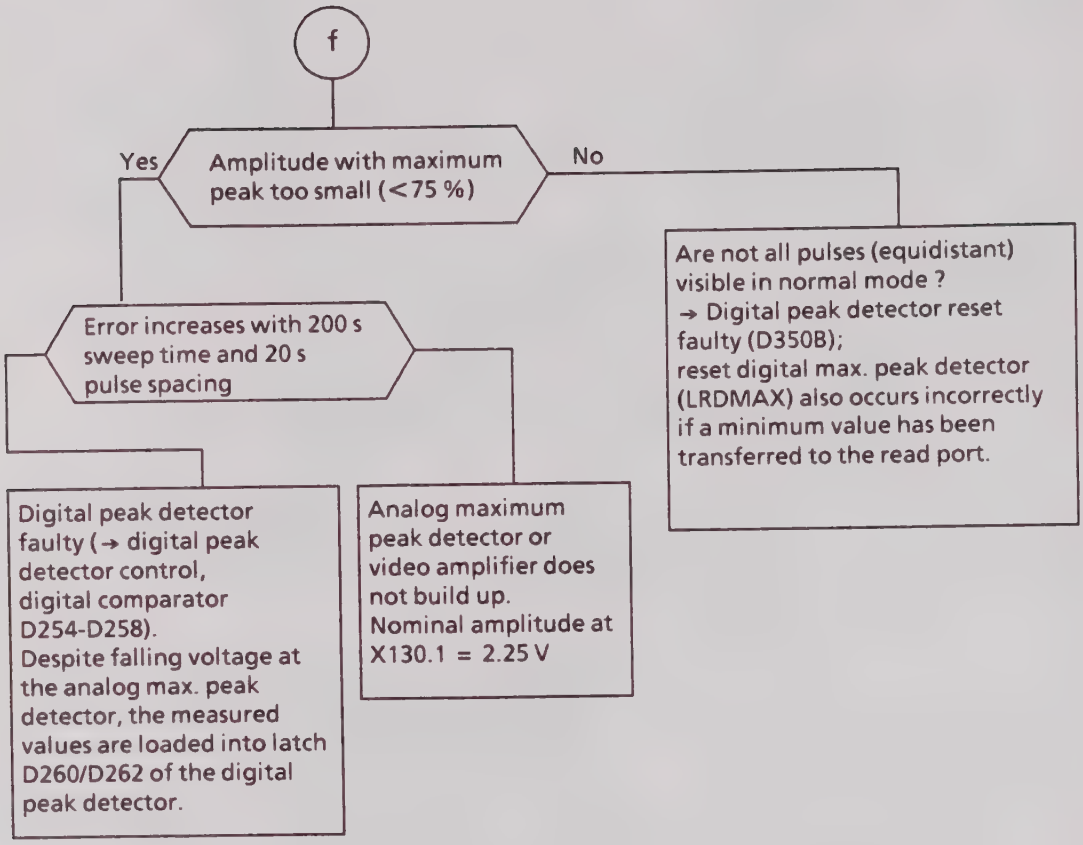
f
Amplitude with maximum peak too small (<75 %)
Yes
No
Error increases with 200 s sweep time and 20 s pulse spacing
Are not all pulses (equidistant) visible in normal mode ?
→ Digital peak detector reset faulty (D350B);
reset digital max. peak detector (LRDMAX) also occurs incorrectly if a minimum value has been transferred to the read port.
Digital peak detector faulty (→ digital peak detector control, digital comparator D254-D258).
Despite falling voltage at the analog max. peak detector, the measured values are loaded into latch D260/D262 of the digital peak detector.
Analog maximum peak detector or video amplifier does not build up.
Nominal amplitude at X130.1 = 2.25 V

6.3.3 Timing Diagrams

6.3.3.1 Triggering / Clock Generator

Synchronization of clock and measurement sequence (A/D converter) to trigger.

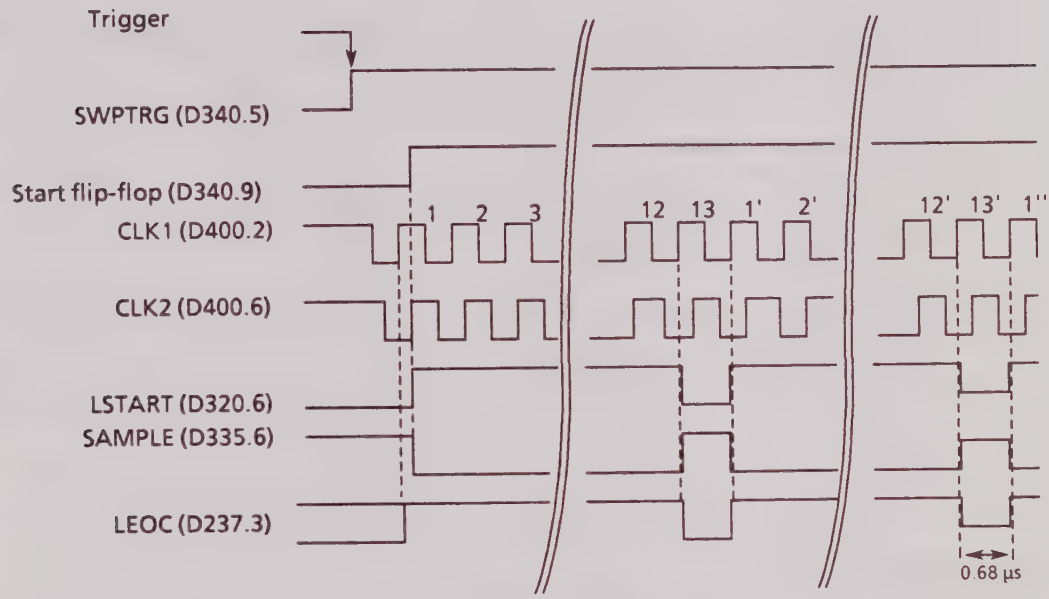

(LSTART = start of conversion, LEOC = end of conversion, cf. 6.3.3.2)

6.3.3.2 A/D Converter

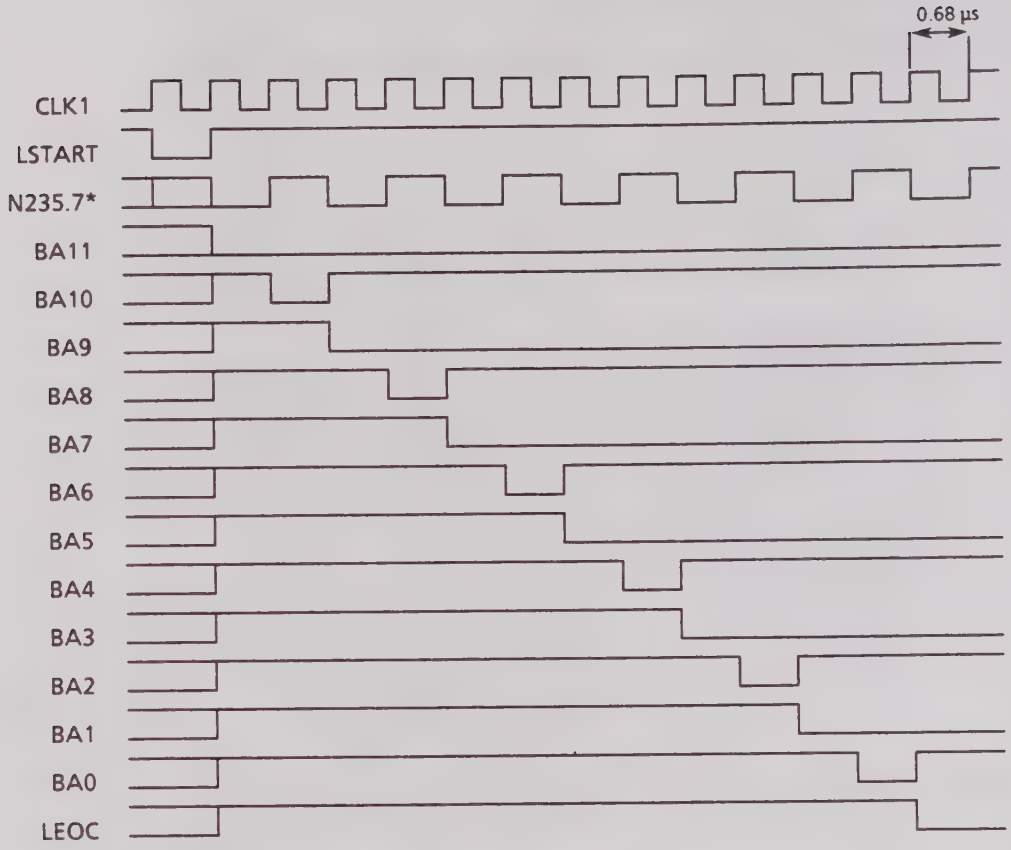

* The timing diagram is a good example since the sequence depends on the comparator decision (N235), i.e. on the analog signal to be measured.

6.3.3.3 Autorun Control

Asynchronous data request (usually FRQSTP = frequency step), synchronous scanning, A/D conversion, transfer of data by DMA.

Spectrum analyzer APMODE (D460.6) = Low level

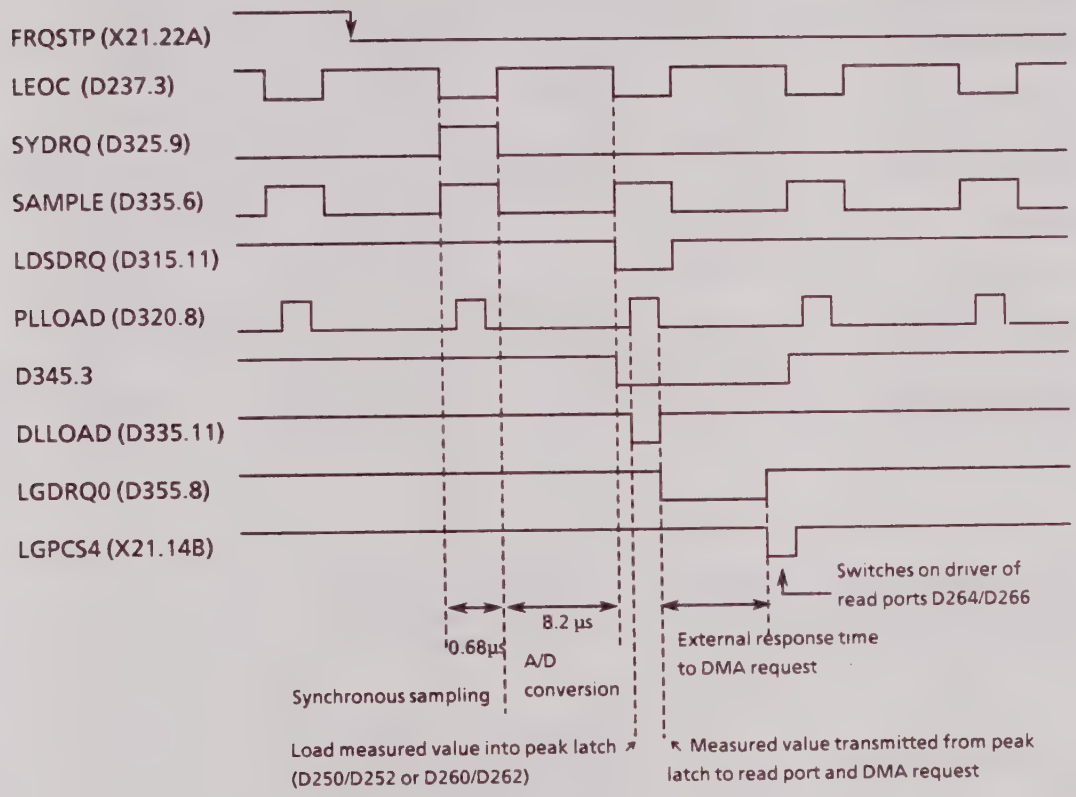

(LGDRQ0 = DMA request, LGPCS4 = Peripheric chip select #4)

Note: in the modes with peak detection (minimum peak, maximum peak, normal), the digital peak detector decides whether the current measured value is to be loaded into a peak latch.

6.3.3.4 Digital Peak Detectors / Control / Reset

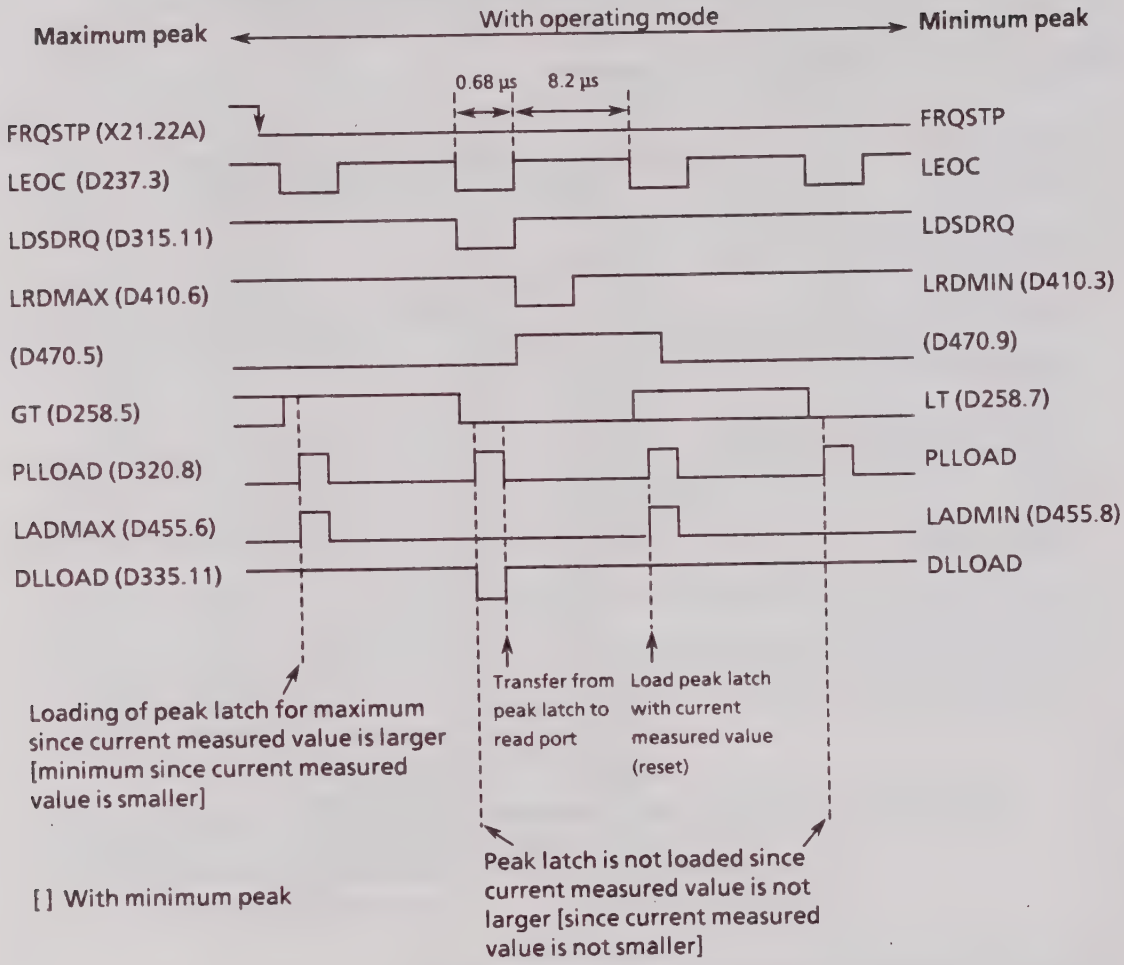

LRDMAX = Reset digital max. peak detector
LRDMIN = Reset digital min. peak detector

} Load respective peak latch with next measured value

The reset takes place in each case after a requested measured value (maximum or minimum) has been transmitted into the read port.

GT = High level if current measured value is larger than that in the max. peak latch D260/D262
LT = High level if current measured value is smaller than that in the min. peak latch D250/D252

6.3.3.5 Operating Mode Normal (Spectrum Analyzer)

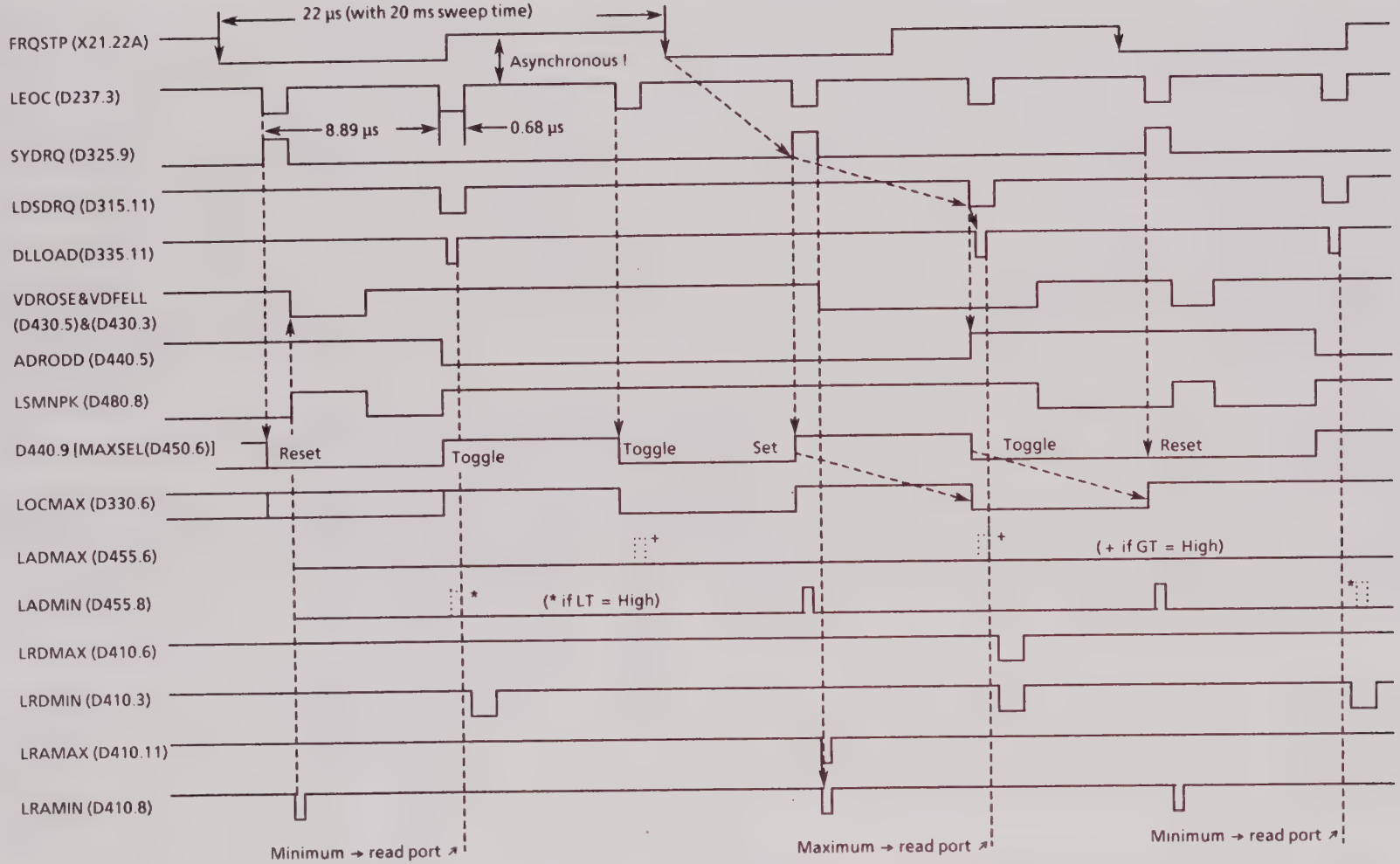

If VIDEO is noisy (VDROSE = High and VDFELL = High), the minimum peak detector is sampled (MAXSEL = Low) following a data request with odd address (ADRODD = High), otherwise always the maximum peak detector.

ROHDE&SCHWARZ

Schaltteillisten
Stromläufe
Bestückungspläne

Part lists
Circuit diagrams
Components plans

Listes des pièces détachées
Schémas de Circuit
Plans des composants

(R 295.00 Bl. 2)
095.1000 Bl. 2

Kennz. Comp.No.	Benennung Designation	Sachnummer Stock No.	Hersteller Manufacturer	Bezeichnung Designation	enthalten in contained in
.	ZUGEH.STROML./CIRC.DIAGR. 805.1319 S				
C1	CC 10NF-20+50%7X8R4000 CAPACITOR	CC 087.7525	VALVO	2222 63051 64051103	
C2	CC 10NF-20+50%7X8R4000 CAPACITOR	CC 087.7525	VALVO	2222 63051 64051103	
C3	CC 3,3NF+-10%6X7R2000 CAPACITOR	CC 087.7083	VALVO	2222 63051 332	
C4	CC 10NF-20+50%7X8R4000 CAPACITOR	CC 087.7525	VALVO	2222 63051 64051103	
C5	CC 10NF-20+50%7X8R4000 CAPACITOR	CC 087.7525	VALVO	2222 63051 64051103	
C6	CC 22OPF+-2%6X7N750 CAPACITOR	CC 087.6941	VALVO	2222 678 58221	
C9	CC 10NF-20+50%7X8R4000 CAPACITOR	CC 087.7525	VALVO	2222 63051 64051103	
C10	CC 10NF-20+50%7X8R4000 CAPACITOR	CC 087.7525	VALVO	2222 63051 64051103	
C15	CC 22OPF+-2%6X7N750 CAPACITOR	CC 087.6941	VALVO	2222 678 58221	
C16	CC 3,3NF+-10%6X7R2000 CAPACITOR	CC 087.7083	VALVO	2222 63051 332	
C17	CC 3,3NF+-10%6X7R2000 CAPACITOR	CC 087.7083	VALVO	2222 63051 332	
C18	CC 100NF+-10%50V5K1200VIE CAPACITOR	CC 084.5350	UNION CARB	CK05BX104K	
C19	CC 22OPF+-2%6X7N750 CAPACITOR	CC 087.6941	VALVO	2222 678 58221	
C21	CC 10NF-20+50%7X8R4000 CAPACITOR	CC 087.7525	VALVO	2222 63051 64051103	
C22	CC 10NF-20+50%7X8R4000 CAPACITOR	CC 087.7525	VALVO	2222 63051 64051103	
C23	CC 1PF+-0,25PF3X4P100 CAPACITOR	CC 087.6170	VALVO	2222 678 03108	
C25	CC 10NF-20+50%7X8R4000 CAPACITOR	CC 087.7525	VALVO	2222 63051 64051103	
C32	CC 10NF-20+50%7X8R4000 CAPACITOR	CC 087.7525	VALVO	2222 63051 64051103	
C33	CC 1PF+-0,25PF3X4P100 CAPACITOR	CC 087.6170	VALVO	2222 678 03108	
C42	CC 10NF-20+50%7X8R4000 CAPACITOR	CC 087.7525	VALVO	2222 63051 64051103	
C43	CC 1PF+-0,25PF3X4P100 CAPACITOR	CC 087.6170	VALVO	2222 678 03108	
C44	CC 100NF+-10%50V5K1200VIE CAPACITOR	CC 084.5350	UNION CARB	CK05BX104K	
C46	CC 100NF+-10%50V5K1200VIE CAPACITOR	CC 084.5350	UNION CARB	CK05BX104K	
C52	CE 47 UF+-20% 6V 7X 5X11 ELECTROLYTIC CAPACITOR	CE 022.8040	ROEDERSTEI	ETR 3 47/6,3 20%	
C54	CE 4,7UF+-20%10V 5X 4X 7 ELECTROLYTIC CAPACITOR	CE 022.8056	ROEDERSTEI	ETR 1 4,7/10 20%	
C55	CC 10NF-20+50%7X8R4000 CAPACITOR	CC 087.7525	VALVO	2222 63051 64051103	
C56	CC 10NF-20+50%7X8R4000 CAPACITOR	CC 087.7525	VALVO	2222 63051 64051103	
C58	CC 3,3NF+-10%6X7R2000 CAPACITOR	CC 087.7083	VALVO	2222 63051 332	
C59	CC 3,3NF+-10%6X7R2000 CAPACITOR	CC 087.7083	VALVO	2222 63051 332	
C60	CC 3,3NF+-10%6X7R2000 CAPACITOR	CC 087.7083	VALVO	2222 63051 332	
C61	CC 10NF-20+50%7X8R4000 CAPACITOR	CC 087.7525	VALVO	2222 63051 64051103	
C70	CC 10NF-20+50%7X8R4000 CAPACITOR	CC 087.7525	VALVO	2222 63051 64051103	
C71	CC 10NF-20+50%7X8R4000 CAPACITOR	CC 087.7525	VALVO	2222 63051 64051103	
C73	CC 47NF+-10%50V5K1200VIEL CAPACITOR	CC 082.7810	UNION CARB	CK05BX473K	
C74	CC 100NF+-10%50V5K1200VIE CAPACITOR	CC 084.5350	UNION CARB	CK05BX104K	
C75	CC 10NF-20+50%7X8R4000 CAPACITOR	CC 087.7525	VALVO	2222 63051 64051103	
C80	CC 100PF+-10%200V5K1200VI CAPACITOR	CC 084.5250	UNION CARB	CK05BX101K	

Für diese Unterlage behalten wir uns alle Rechte vor

Kennz. Comp.No.	Benennung Designation	Sachnummer Stock No.	Hersteller Manufacturer	Bezeichnung Designation	enthalten in contained in
C81	CK 470NF+-5%63V5RM MKT CAPACITOR	CK 099.2975	WIMA	MKS2/63/0,47UF/5%	
C82	CC 100PF+-10%200V5K 1200VI CAPACITOR	CC 084.5250	UNION CARB	CKO5BX101K	
C83	CK 150NF+-5%63V5RM MKT CAPACITOR	CK 099.2946	WIMA	MKS2/63/0,15UF/5%	
C84	CC 100PF+-10%200V5K 1200VI CAPACITOR	CC 084.5250	UNION CARB	CKO5BX101K	
C85	CK 47NF+-5%63V5RM MKT CAPACITOR	CK 099.2917	WIMA	MKS2/63/0,047UF/5%	
C86	CC 100PF+-10%200V5K 1200VI CAPACITOR	CC 084.5250	UNION CARB	CKO5BX101K	
C87	CK 15NF+-5%63V5RM MKT CAPACITOR	CK 099.2875	WIMA	MKS2/63/0,015UF/5%	
C88	CC 100PF+-10%200V5K 1200VI CAPACITOR	CC 084.5250	UNION CARB	CKO5BX101K	
C89	CK 4,7NF+-10%100V RM5 KC POLYCARBONATE CAPACITOR	CK 099.6058	WIMA	FKC2 4700/10%/100V	
C90	CC 100PF+-10%200V5K 1200VI CAPACITOR	CC 084.5250	UNION CARB	CKO5BX101K	
C91	CK 1,5NF +-1% 100V RM5 KP POLYPROPYLENE CAPACITOR	CK 007.7600	ROE	KP1830-215/011-R	
C92	CC 100PF+-10%200V5K 1200VI CAPACITOR	CC 084.5250	UNION CARB	CKO5BX101K	
C93	CK 330PF +-1% 100V RM5 KP POLYPROPYLENE CAPACITOR	CK 007.7569	ROE	KP1830-133/011-R	
C94	CC 56PF+-2%5X6NPO CAPACITOR	CC 087.6512	VALVO	2222 678 10569	
C111	CC 10NF-20+50%7X8R4000 CAPACITOR	CC 087.7525	VALVO	2222 63051 64051103	
C120	CC 10NF-20+50%7X8R4000 CAPACITOR	CC 087.7525	VALVO	2222 63051 64051103	
C122	CC 10NF-20+50%7X8R4000 CAPACITOR	CC 087.7525	VALVO	2222 63051 64051103	
C130	CC 100NF+-10%50V5K 1200VIE CAPACITOR	CC 084.5350	UNION CARB	CKO5BX104K	
C133	CC 100NF+-10%50V5K 1200VIE CAPACITOR	CC 084.5350	UNION CARB	CKO5BX104K	
C151	CC 2,7PF+-0,25PF3X4NPO CERAMIC CAPACITOR	CC 087.6358	VALVO	2222 678 09278	
C156	CK 470PF +-1% 100V RM5 KP POLYPROPYLENE CAPACITOR	CK 007.7575	ROE	KP1830-147/011-R	
C160	CC 100NF+-10%50V5K 1200VIE CAPACITOR	CC 084.5350	UNION CARB	CKO5BX104K	
C161	CC 100NF+-10%50V5K 1200VIE CAPACITOR	CC 084.5350	UNION CARB	CKO5BX104K	
C164	CC 100NF+-10%50V5K 1200VIE CAPACITOR	CC 084.5350	UNION CARB	CKO5BX104K	
C170	CC 2,2PF+-0,25PF3X4NPO CAPACITOR	CC 087.6341	VALVO	2222 678 09228	
C173	CC 2,2PF+-0,25PF3X4NPO CAPACITOR	CC 087.6341	VALVO	2222 678 09228	
C184	CK 470PF +-1% 100V RM5 KP POLYPROPYLENE CAPACITOR	CK 007.7575	ROE	KP1830-147/011-R	
C185	CC 100NF+-10%50V5K 1200VIE CAPACITOR	CC 084.5350	UNION CARB	CKO5BX104K	
C186	CC 100NF+-10%50V5K 1200VIE CAPACITOR	CC 084.5350	UNION CARB	CKO5BX104K	
C187	CC 1UF +-10% 50VK 1200LR CAPACITOR	092.1015	AEROVOX	CKRO6BX105KLEVELR	
C188	CC 100NF+-10%50V5K 1200VIE CAPACITOR	CC 084.5350	UNION CARB	CKO5BX104K	
C189	CC 33PF+-2%4X5NPO CAPACITOR	CC 087.6487	VALVO	2222 678 10339	
C192	CK 10NF+-5%63V5RM MKT CAPACITOR	CK 099.2869	WIMA	FKS 2/100/0,01UF/5%	
C193	CC 10NF-20+50%7X8R4000 CAPACITOR	CC 087.7525	VALVO	2222 63051 64051103	
C215	CK 1,0NF +-1% 100V RM5 KP POLYPROPYLENE CAPACITOR	CK 007.7598	ROE	KP1830-210/011-R	
C217	CC 10NF-20+50%7X8R4000 CAPACITOR	CC 087.7525	VALVO	2222 63051 64051103	
C218	CC 10NF-20+50%7X8R4000 CAPACITOR	CC 087.7525	VALVO	2222 63051 64051103	
C221	CC 100NF+-10%50V5K 1200VIE CAPACITOR	CC 084.5350	UNION CARB	CKO5BX104K	
C223	CC 47PF+-2%4X5N150 CAPACITOR	CC 087.6670	VALVO	2222 678 34479	

Kennz. Comp.No.	Benennung Designation	Sachnummer Stock No.	Hersteller Manufacturer	Bezeichnung Designation	enthalten in contained in
C226	CC 100NF+-10%50V5K 1200VIE CAPACITOR	CC 084.5350	UNION CARB	CK05BX104K	
C230	CC 10NF-20+50%7X8R4000 CAPACITOR	CC 087.7525	VALVO	2222 63051 64051103	
C231	CC 10NF-20+50%7X8R4000 CAPACITOR	CC 087.7525	VALVO	2222 63051 64051103	
C234	CC 1NF+-10%63V K2000 CERAMIC CAPACITOR	CC 022.0784	VALVO	2222 63051 102	
C235	CC 100NF+-10%50V5K 1200VIE CAPACITOR	CC 084.5350	UNION CARB	CK05BX104K	
C236	CC 100NF+-10%50V5K 1200VIE CAPACITOR	CC 084.5350	UNION CARB	CK05BX104K	
C237	CC 100NF+-10%50V5K 1200VIE CAPACITOR	CC 084.5350	UNION CARB	CK05BX104K	
C240	CC 100NF+-10%50V5K 1200VIE CAPACITOR	CC 084.5350	UNION CARB	CK05BX104K	
C241	CC 100NF+-10%50V5K 1200VIE CAPACITOR	CC 084.5350	UNION CARB	CK05BX104K	
C242	CC 10NF-20+50%7X8R4000 CAPACITOR	CC 087.7525	VALVO	2222 63051 64051103	
C243	CE 1,5UF+-20%25V 5X 4X 7 ELECTROLYTIC CAPACITOR	CE 087.9334	ROEDERSTEI	ETR 1 1,5/25 20%	
C248	CE 10 UF+-20%16V 7X 4X 8 ELECTROLYTIC CAPACITOR	CE 022.8085	ROEDERSTEI	ETR 2 10/16 20%	
C250	CC 100NF+-10%50V5K 1200VIE CAPACITOR	CC 084.5350	UNION CARB	CK05BX104K	
C252	CC 100NF+-10%50V5K 1200VIE CAPACITOR	CC 084.5350	UNION CARB	CK05BX104K	
C254	CC 100NF+-10%50V5K 1200VIE CAPACITOR	CC 084.5350	UNION CARB	CK05BX104K	
C256	CC 100NF+-10%50V5K 1200VIE CAPACITOR	CC 084.5350	UNION CARB	CK05BX104K	
C258	CC 100NF+-10%50V5K 1200VIE CAPACITOR	CC 084.5350	UNION CARB	CK05BX104K	
C260	CC 100NF+-10%50V5K 1200VIE CAPACITOR	CC 084.5350	UNION CARB	CK05BX104K	
C262	CC 100NF+-10%50V5K 1200VIE CAPACITOR	CC 084.5350	UNION CARB	CK05BX104K	
C264	CC 100NF+-10%50V5K 1200VIE CAPACITOR	CC 084.5350	UNION CARB	CK05BX104K	
C266	CC 100NF+-10%50V5K 1200VIE CAPACITOR	CC 084.5350	UNION CARB	CK05BX104K	
C280	CC 100NF+-10%50V5K 1200VIE CAPACITOR	CC 084.5350	UNION CARB	CK05BX104K	
C290	CC 100NF+-10%50V5K 1200VIE CAPACITOR	CC 084.5350	UNION CARB	CK05BX104K	
C291	CC 100NF+-10%50V5K 1200VIE CAPACITOR	CC 084.5350	UNION CARB	CK05BX104K	
C292	CC 100NF+-10%50V5K 1200VIE CAPACITOR	CC 084.5350	UNION CARB	CK05BX104K	
C293	CC 100NF+-10%50V5K 1200VIE CAPACITOR	CC 084.5350	UNION CARB	CK05BX104K	
C294	CE 100UF-10+50% 16V 9X13 ELECTROLYTIC CAPACITOR	CE 006.7165	ROEDERST	EK 00CB 310 D	
C295	CE 100UF-10+50% 16V 9X13 ELECTROLYTIC CAPACITOR	CE 006.7165	ROEDERST	EK 00CB 310 D	
C296 ..299	CC 100NF+-10%50V5K 1200VIE CAPACITOR	CC 084.5350	UNION CARB	CK05BX104K	
C300	CE 100UF-10+50% 25V 13X13 ELECTROLYTIC CAPACITOR	CE 208.4007	ROEDERST	ELKOEK100/25	
C301	CE 100UF-10+50% 25V 13X13 ELECTROLYTIC CAPACITOR	CE 208.4007	ROEDERST	ELKOEK100/25	
C310	CC 100NF+-10%50V5K 1200VIE CAPACITOR	CC 084.5350	UNION CARB	CK05BX104K	
C315	CC 100NF+-10%50V5K 1200VIE CAPACITOR	CC 084.5350	UNION CARB	CK05BX104K	
C320	CC 100NF+-10%50V5K 1200VIE CAPACITOR	CC 084.5350	UNION CARB	CK05BX104K	
C325	CC 100NF+-10%50V5K 1200VIE CAPACITOR	CC 084.5350	UNION CARB	CK05BX104K	
C330	CC 100NF+-10%50V5K 1200VIE CAPACITOR	CC 084.5350	UNION CARB	CK05BX104K	
C335	CC 100NF+-10%50V5K 1200VIE CAPACITOR	CC 084.5350	UNION CARB	CK05BX104K	
C340	CC 100NF+-10%50V5K 1200VIE CAPACITOR	CC 084.5350	UNION CARB	CK05BX104K	
C345	CC 100NF+-10%50V5K 1200VIE CAPACITOR	CC 084.5350	UNION CARB	CK05BX104K	

Für diese Unterlage behalten wir uns alle Rechte vor

Kennz. Comp.No.	Benennung Designation	Sachnummer Stock No.	Hersteller Manufacturer	Bezeichnung Designation	enthalten in contained in
C350	CC 100NF+-10%50V5K1200VIE CAPACITOR	CC 084.5350	UNION CARB	CK05BX104K	
C355	CC 100NF+-10%50V5K1200VIE CAPACITOR	CC 084.5350	UNION CARB	CK05BX104K	
C360	CC 100NF+-10%50V5K1200VIE CAPACITOR	CC 084.5350	UNION CARB	CK05BX104K	
C361	CC 100NF+-10%50V5K1200VIE CAPACITOR	CC 084.5350	UNION CARB	CK05BX104K	
C362	CC 100NF+-10%50V5K1200VIE CAPACITOR	CC 084.5350	UNION CARB	CK05BX104K	
C363	CC 100PF+-2%6X9NP0 CAPACITOR	CC 087.6541	VALVO	2222 678 10101	
C365	CC 100NF+-10%50V5K1200VIE CAPACITOR	CC 084.5350	UNION CARB	CK05BX104K	
C366	CC 100NF+-10%50V5K1200VIE CAPACITOR	CC 084.5350	UNION CARB	CK05BX104K	
C367	CC 680PF+-10%4X5R2000 CAPACITOR	CC 087.7019	VALVO	2222 63051 681	
C372	CC 1UF +-10% 50VK1200LR CAPACITOR	092.1015	AEROVOX	CKR06BX105KLEVELR	
C377	CC 1UF +-10% 50VK1200LR CAPACITOR	092.1015	AEROVOX	CKR06BX105KLEVELR	
C379	CC 100PF+-2%6X9NP0 CAPACITOR	CC 087.6541	VALVO	2222 678 10101	
C387	CC 4,7NF+-10%6X9R2000 CAPACITOR	CC 087.7102	VALVO	2222 63051 472	
C390	CC 10PF+-0,25PF3X4N750 CAPACITOR	CC 087.6787	VALVO	2222 678 57109	
C391	CC 100NF+-10%50V5K1200VIE CAPACITOR	CC 084.5350	UNION CARB	CK05BX104K	
C392	CC 100NF+-10%50V5K1200VIE CAPACITOR	CC 084.5350	UNION CARB	CK05BX104K	
C398	CG 100PF+-2PF250VTKE MICA CAPACITOR	CG 023.1503	JAHRE	53-1/100PF/2PF/250	
C399	CK 220PF +-1% 100V RM5 KP POLYPROPYLENE CAPACITOR	CK 007.7552	ROE	KP1830-122/011-R	
C400	CC 100NF+-10%50V5K1200VIE CAPACITOR	CC 084.5350	UNION CARB	CK05BX104K	
C410	CC 100NF+-10%50V5K1200VIE CAPACITOR	CC 084.5350	UNION CARB	CK05BX104K	
C414	CC 100NF+-10%50V5K1200VIE CAPACITOR	CC 084.5350	UNION CARB	CK05BX104K	
C415	CC 100NF+-10%50V5K1200VIE CAPACITOR	CC 084.5350	UNION CARB	CK05BX104K	
C421	CC 100NF+-10%50V5K1200VIE CAPACITOR	CC 084.5350	UNION CARB	CK05BX104K	
C422	CC 100NF+-10%50V5K1200VIE CAPACITOR	CC 084.5350	UNION CARB	CK05BX104K	
C430	CC 100NF+-10%50V5K1200VIE CAPACITOR	CC 084.5350	UNION CARB	CK05BX104K	
C440	CC 100NF+-10%50V5K1200VIE CAPACITOR	CC 084.5350	UNION CARB	CK05BX104K	
C445	CC 100NF+-10%50V5K1200VIE CAPACITOR	CC 084.5350	UNION CARB	CK05BX104K	
C450	CC 100NF+-10%50V5K1200VIE CAPACITOR	CC 084.5350	UNION CARB	CK05BX104K	
C451	CC 1NF+-10%63V K2000 CERAMIC CAPACITOR	CC 022.0784	VALVO	2222 63051 102	
C454	CC 1NF+-10%63V K2000 CERAMIC CAPACITOR	CC 022.0784	VALVO	2222 63051 102	
C455	CC 100NF+-10%50V5K1200VIE CAPACITOR	CC 084.5350	UNION CARB	CK05BX104K	
C456	CC 100NF+-10%50V5K1200VIE CAPACITOR	CC 084.5350	UNION CARB	CK05BX104K	
C457	CC 1NF+-10%63V K2000 CERAMIC CAPACITOR	CC 022.0784	VALVO	2222 63051 102	
C460	CC 100NF+-10%50V5K1200VIE CAPACITOR	CC 084.5350	UNION CARB	CK05BX104K	
C470	CC 100NF+-10%50V5K1200VIE CAPACITOR	CC 084.5350	UNION CARB	CK05BX104K	
C475	CC 100NF+-10%50V5K1200VIE CAPACITOR	CC 084.5350	UNION CARB	CK05BX104K	
C480	CC 100NF+-10%50V5K1200VIE CAPACITOR	CC 084.5350	UNION CARB	CK05BX104K	
D1	BL CD4053BF 3X2CH. MUX MULTIPLEXER	565.3144	RCA	CD4053BF	

Kennz. Comp.No.	Benennung Designation		Sachnummer Stock No.	Hersteller Manufacturer	Bezeichnung Designation	enthalten in contained in
D2	BL CD4051BF 8CH. MUX MULTIPLEXER		517.7520	RCA	CD4051BF	
D15	BL CD4051BF 8CH. MUX MULTIPLEXER		517.7520	RCA	CD4051BF	
D16	BL CD4052BF 2X4CHAN.MUX MULTIPLEXER/DEMULTIPLEXER		567.3435	RCA	CD4052BF	
D17	BL CD4051BF 8CH. MUX MULTIPLEXER		517.7520	RCA	CD4051BF	
D18	BL PC74HC377P 8XD-FF EN OCTAL D-FLIP-FLOP	BL	806.0045	VALVO	PC74HC377P	
D20	BL CD4053BF 3X2CH. MUX MULTIPLEXER		565.3144	RCA	CD4053BF	
D70	BJ TL610CP 1X ANALOGSCH ANALOG SWITCH	BJ	339.4122	TEXAS INST	TL610CP	
D74	BL PC74HC377P 8XD-FF EN OCTAL D-FLIP-FLOP	BL	806.0045	VALVO	PC74HC377P	
D75	BL MM74HC4051N 8CH.AN.MUX 8CH.ANALOG MUX/DEMUX	BL	099.9670	NSC	MM74HC4051N	
D193	BJ SD5000N 4X ANALOGSCH BJ SD5000N 4XANALOGSWITCH	BJ	342.2340	SILICONIX	SD5000N	
D237	BJ AM2504PC 12B.REGIST SUCCESSIVE APPROX.REGIST.		805.1419	SILICONIX	SI25HC04CJ	
D240	BJ AM6012F 12B.DA-CONV D/A-CONVERTER		805.1425	VALVO	AM6012F	
D250	BL MM74HC574N 8XD-FF OCTAL D-FLIPFLOP	BL	099.9634	NSC	MM74HC574N	
D252	BL MM74HC574N 8XD-FF OCTAL D-FLIPFLOP	BL	099.9634	NSC	MM74HC574N	
D254	BL MM74HC85N 4B. COMPAR 4-BIT MAGNITUDE COMP.	BL	571.3188	MOTOROLA	MC74HC85N	
D256	BL MM74HC85N 4B. COMPAR 4-BIT MAGNITUDE COMP.	BL	571.3188	MOTOROLA	MC74HC85N	
D258	BL MM74HC85N 4B. COMPAR 4-BIT MAGNITUDE COMP.	BL	571.3188	MOTOROLA	MC74HC85N	
D260	BL MM74HC574N 8XD-FF OCTAL D-FLIPFLOP	BL	099.9634	NSC	MM74HC574N	
D262	BL MM74HC574N 8XD-FF OCTAL D-FLIPFLOP	BL	099.9634	NSC	MM74HC574N	
D264	BL MM74HC574N 8XD-FF OCTAL D-FLIPFLOP	BL	099.9634	NSC	MM74HC574N	
D266	BL MM74HC574N 8XD-FF OCTAL D-FLIPFLOP	BL	099.9634	NSC	MM74HC574N	
D310	BL PC74HC377P 8XD-FF EN OCTAL D-FLIP-FLOP	BL	806.0045	VALVO	PC74HC377P	
D315	BL MM74HC00N 4X2IN.NAND QUAD 2-INPUT NAND GATE	BL	571.3194	MOTOROLA	MC74HC00N	
D320	BL MM74HC14N 6XINV.SCHM HEX INV.SCHMITT TRIGGER	BL	099.9492	NSC	MM74HC14N	
D325	BL MM74HC74N 2XD-FLIPFL DUAL D FLIP-FLOP	BL	571.3171	NSC	MM74HC74N	
D330	BL MM74HC107N 2XJK-FF CL DUAL J-K FLIPFLOP W.CLEAR	BL	099.9534	NSC	MM74HC107N	
D335	BL MM74HC00N 4X2IN.NAND QUAD 2-INPUT NAND GATE	BL	571.3194	MOTOROLA	MC74HC00N	
D340	BL MM74HC74N 2XD-FLIPFL DUAL D FLIP-FLOP	BL	571.3171	NSC	MM74HC74N	
D345	BL MM74HC107N 2XJK-FF CL DUAL J-K FLIPFLOP W.CLEAR	BL	099.9534	NSC	MM74HC107N	
D350	BL MM74HC10N 3X3IN.NAND TRIPLE 3-INPUT NAND GATE	BL	571.3294	MOTOROLA	MC74HC10N	
D355	BL MM74HC74N 2XD-FLIPFL DUAL D FLIP-FLOP	BL	571.3171	NSC	MM74HC74N	
D360	BL MM74HC151N 8CH.DIGMUX 8CHANNEL DIGITAL MUX	BL	395.2967	NSC	MM74HC151N	
D365	BL MM74HC14N 6XINV.SCHM HEX INV.SCHMITT TRIGGER	BL	099.9492	NSC	MM74HC14N	
D366	BL MM74HC14N 6XINV.SCHM HEX INV.SCHMITT TRIGGER	BL	099.9492	NSC	MM74HC14N	
D400	BL MM74HC107N 2XJK-FF CL DUAL J-K FLIPFLOP W.CLEAR	BL	099.9534	NSC	MM74HC107N	
D410	BL MM74HC08N 4X2IN ANDG QUAD 2INP. AND GATE	BL	571.3313	MOTOROLA	MC74HC08N	
D414	BL MM74HC74N 2XD-FLIPFL DUAL D FLIP-FLOP	BL	571.3171	NSC	MM74HC74N	
D415	BL MM74HC00N 4X2IN.NAND QUAD 2-INPUT NAND GATE	BL	571.3194	MOTOROLA	MC74HC00N	
D430	BL MM74HC107N 2XJK-FF CL DUAL J-K FLIPFLOP W.CLEAR	BL	099.9534	NSC	MM74HC107N	

Für diese Unterlage behalten wir uns alle Rechte vor

Kennz. Comp.No.	Benennung Designation	Sachnummer Stock No.	Hersteller Manufacturer	Bezeichnung Designation	enthalten in contained in
D440	BL MM74HC112N 2XJK-FF DUAL J-K FLIPFLOP	BL 099.9770	NSC	MM74HC112N	
D445	BL MM74HCOON 4X2IN.NAND QUAD 2-INPUT NAND GATE	BL 571.3194	MOTOROLA	MC74HCOON	
D450	BL MM74HCOON 4X2IN.NAND QUAD 2-INPUT NAND GATE	BL 571.3194	MOTOROLA	MC74HCOON	
D455	BL MM74HC04N 6XINVERTER HEX-INVERTER	BL 571.3365	MOTOROLA	MC74HC04N	
D456	BL SN74LS26N 4/2INP.NAND IC SN74LS26N 4/2INP.NAND	280.7567	TEXAS	SN74LS26N	
D460	BL PC74HC377P 8XD-FF EN OCTAL D-FLIP-FLOP	BL 806.0045	VALVO	PC74HC377P	
D470	BL MM74HC74N 2XD-FLIPFL DUAL D FLIP-FLOP	BL 571.3171	NSC	MM74HC74N	
D475	BL MM74HC27N 3X3IN NORG 3X3-INPUT NOR GATE	BL 394.9100	NSC	MM74HC27N	
D480	BL MM74HC1ON 3X3IN.NAND TRIPLE 3-INPUT NAND GATE	BL 571.3294	MOTOROLA	MC74HC1ON	
L140	LF ROHRK.RD3,5X1,2X3 GETR TUBLAR CORE	LF 026.9257			
L150	LF ROHRK.RD3,5X1,2X3 GETR TUBLAR CORE	LF 026.9257			
L171	LF ROHRK.RD3,5X1,2X3 GETR TUBLAR CORE	LF 026.9257			
L172	LF ROHRK.RD3,5X1,2X3 GETR TUBLAR CORE	LF 026.9257			
L201	LF ROHRK.RD3,5X1,2X3 GETR TUBLAR CORE	LF 026.9257			
L202	LF ROHRK.RD3,5X1,2X3 GETR TUBLAR CORE	LF 026.9257			
L290	LD 4,70UH10%1,200HMO,239A CHOKE	LD 067.2940	DELEVAN	DROSSEL1025-36	
L291	LD 4,70UH10%1,200HMO,239A CHOKE	LD 067.2940	DELEVAN	DROSSEL1025-36	
L296	LD 4,70UH10%1,200HMO,239A CHOKE	LD 067.2940	DELEVAN	DROSSEL1025-36	
L297	LD 4,70UH10%1,200HMO,239A CHOKE	LD 067.2940	DELEVAN	DROSSEL1025-36	
N20	BO LT318AJ8 H.S.R.OPAMP OPERATIONAL AMPLIFIER	805.1454	LINEAR TEC	LT318AJ8	
N30	BO LT318AJ8 H.S.R.OPAMP OPERATIONAL AMPLIFIER	805.1454	LINEAR TEC	LT318AJ8	
N40	BO LT318AJ8 H.S.R.OPAMP OPERATIONAL AMPLIFIER	805.1454	LINEAR TEC	LT318AJ8	
N50	BO LM31ON VOLT.FOLLOW VOLTAGE FOLLOWER	266.0923	NSC	LM31ON	
N100	BO LM31ON VOLT.FOLLOW VOLTAGE FOLLOWER	266.0923	NSC	LM31ON	
N110	BO LM31ON VOLT.FOLLOW VOLTAGE FOLLOWER	266.0923	NSC	LM31ON	
N120	BO LT318AJ8 H.S.R.OPAMP OPERATIONAL AMPLIFIER	805.1454	LINEAR TEC	LT318AJ8	
N230	BO LM31ON VOLT.FOLLOW VOLTAGE FOLLOWER	266.0923	NSC	LM31ON	
N235	BO CMP05FP PREC COMPAR COMPARATOR	374.8050	PMI	CMP05FP	
N280	BO REF01CZ 10V 20MA VREF VOLTAGE REFERENCE	BO 006.9768	PMI	REF01CZ	
N360	BO LM319H 2X COMPAR COMPARATOR	529.5586	NSC	LM319H	
N370	BO UA741MJG OPAMP OPERATIONAL AMPLIFIER	BO 275.0822	TEXAS	UA741MJG	
N390	BO NE521N 2X COMPAR COMPARATOR	230.5602	SIGNETICS	NE521N	
N420	BO LM319H 2X COMPAR COMPARATOR	529.5586	NSC	LM319H	
R1	RL 0,35W 10,0KOHM+-1%TK50 RESISTOR	RL 083.1297	DRALORIC	SMA0207/10K-F-D	
R2	RL 0,35W 1MOHM+-1%TK50 RESISTOR	RL 082.7862	DRALORIC	SMA0207/1M-F-D	
R3	RL 0,35W 33,2KOHM+-1%TK50 RESISTOR	RL 083.1674	DRALORIC	SMA0207/33,2K-F-C	
R4	RL 0,35W 150 OHM+-1%TK50 RESISTOR	RL 082.9942	DRALORIC	SMA0207/150OHM-F-D	

Kennz. Comp.No.	Benennung Designation	Sachnummer Stock No.	Hersteller Manufacturer	Bezeichnung Designation	enthalten in contained in
R6	RL 0,35W3,32MOHM+-1%TK50 METALFILMRESISTOR	RL 099.8215	RESISTA	MK2 3,32MOHM 1% TK50	
R7	RL 0,35W 39,2KOHM+-1%TK50 RESISTOR	RL 083.1745	DRALORIC	SMA/207/39,2K-F-C	
R8	RL 0,35W 22,1KOHM+-1%TK50 RESISTOR	RL 083.1545	DRALORIC	SMA/207/22,1K-F-C	
R9	RL 0,35W 10,0KOHM+-1%TK50 RESISTOR	RL 083.1297	DRALORIC	SMA0207/10K-F-D	
R10	RL 0,35W 39,2KOHM+-1%TK50 RESISTOR	RL 083.1745	DRALORIC	SMA/207/39,2K-F-C	
R11	RL 0,35W 22,1KOHM+-1%TK50 RESISTOR	RL 083.1545	DRALORIC	SMA/207/22,1K-F-C	
R12	RL 0,35W 15,0KOHM+-1%TK50 RESISTOR	RL 083.1400	DRALORIC	SMA0207/15K-F-D	
R13	RL 0,35W 5,62KOHM+-1%TK50 RESISTOR	RL 082.2190	DRALORIC	SMA0207/5,62K-F-C	
R14	RL 0,35W 2,74KOHM+-1%TK50 RESISTOR	RL 083.0926	DRALORIC	SMA0207/2,74K-F-D	
R15	RL 0,35W3,32MOHM+-1%TK50 METALFILMRESISTOR	RL 099.8215	RESISTA	MK2 3,32MOHM 1% TK50	
R16	RL 0,35W 33,2KOHM+-1%TK50 RESISTOR	RL 083.1674	DRALORIC	SMA0207/33,2K-F-C	
R17	RL 0,35W 33,2KOHM+-1%TK50 RESISTOR	RL 083.1674	DRALORIC	SMA0207/33,2K-F-C	
R19	RL 0,35W3,32MOHM+-1%TK50 METALFILMRESISTOR	RL 099.8215	RESISTA	MK2 3,32MOHM 1% TK50	
R20	RL 0,35W 1KOHM+-1%TK50 RESISTOR	RL 082.2160	DRALORIC	SMA0207/1K-F-C	
R21	RL 0,35W 10,0KOHM+-1%TK50 RESISTOR	RL 083.1297	DRALORIC	SMA0207/10K-F-D	
R23	RL 0,35W 4,75KOHM+-1%TK50 RESISTOR	RL 083.1097	DRALORIC	SMA0207/4,75K-F-D	
R24	RL 0,35W 1 KOHM+-0,1%TK25 RESISTOR	083.9146	DRALORIC	SMA0207/1K-B-E	
R25	RL 0,35W 1 KOHM+-0,1%TK25 RESISTOR	083.9146	DRALORIC	SMA0207/1K-B-E	
R33	RL 0,35W 4,75KOHM+-1%TK50 RESISTOR	RL 083.1097	DRALORIC	SMA0207/4,75K-F-D	
R34	RL 0,35W 1 KOHM+-0,1%TK25 RESISTOR	083.9146	DRALORIC	SMA0207/1K-B-E	
R35	RL 0,35W 1 KOHM+-0,1%TK25 RESISTOR	083.9146	DRALORIC	SMA0207/1K-B-E	
R36	RL 0,35W 1 KOHM+-0,1%TK25 RESISTOR	083.9146	DRALORIC	SMA0207/1K-B-E	
R37	RL 0,35W10,0KOHM+-0,1%T25 RESISTOR	RL 084.3064	DRALORIC	SMA0207/10K-B-E	
R43	RL 0,35W 4,75KOHM+-1%TK50 RESISTOR	RL 083.1097	DRALORIC	SMA0207/4,75K-F-D	
R44	RL 0,35W 6,81KOHM+-1%TK50 RESISTOR	RL 082.2560	DRALORIC	SMA 0207/6,81K-F-C	
R46	RL 0,35W 6,81KOHM+-1%TK50 RESISTOR	RL 082.2560	DRALORIC	SMA 0207/6,81K-F-C	
R47	RL 0,35W15 OHM 1%TK50 RESISTOR	RL 082.9020	DRALORIC	SMA0207/150HM-F-D	
R48	RL 0,35W15 OHM 1%TK50 RESISTOR	RL 082.9020	DRALORIC	SMA0207/150HM-F-D	
R50	RL 0,35W1,50KOHM+-0,1%T25 RESISTOR	RL 083.9481	DRALORIC	SMA0207/1,5K-B-E	
R51	RL 0,35W 1 KOHM+-0,1%TK25 RESISTOR	083.9146	DRALORIC	SMA0207/1K-B-E	
R52	RL 0,35W 3,32KOHM+-1%TK50 RESISTOR	RL 083.0990	DRALORIC	SMA0207/3,32K-F-D	
R53	RL 0,35W 100 OHM+-1%TK50 RESISTOR	RL 082.6543	DRALORIC	SMA0207/100/HM-F-D	
R54	RL 0,35W 2,21KOHM+-1%TK50 RESISTOR	RL 082.2477	DRALORIC	SMA 0207/2,21K-F-C	
R55	RL 0,35W 10,0KOHM+-1%TK50 RESISTOR	RL 083.1297	DRALORIC	SMA0207/10K-F-D	
R56	RL 0,35W 2,43KOHM+-1%TK50 RESISTOR	RL 083.0884	DRALORIC	SMA0207/2,43K-F-D	
R57	RS 0,3W 200 OHM+-10%CERM. TRIMMING POTENTIOMETER	RS 006.6669	BOURNS	3296W-1- 200OHM+-10%	
R58	RL 0,35W 33,2KOHM+-1%TK50 RESISTOR	RL 083.1674	DRALORIC	SMA0207/33,2K-F-C	
R59	RL 0,35W 33,2KOHM+-1%TK50 RESISTOR	RL 083.1674	DRALORIC	SMA0207/33,2K-F-C	
R60	RL 0,35W 33,2KOHM+-1%TK50 RESISTOR	RL 083.1674	DRALORIC	SMA0207/33,2K-F-C	

Für diese Unterlage behalten wir uns alle Rechte vor

Kennz. Comp.No.	Benennung Designation	Sachnummer Stock No.	Hersteller Manufacturer	Bezeichnung Designation	enthalten in contained in
R61	RL 0,35W 10,0KOHM+-1%TK50 RESISTOR	RL 083.1297	DRALORIC	SMA0207/10K-F-D	
R70	RL 0,35W 2,21KOHM+-1%TK50 RESISTOR	RL 082.2477	DRALORIC	SMA 0207/2,21K-F-C	
R71	RL 0,35W 357 KOHM+-1%TK50 RESISTOR	RL 083.2470	DRALORIC	SMA0207/357K-F-C	
R72	RL 0,35W 301 OHM+-1%TK50 RESISTOR	RL 083.0210	DRALORIC	SMA0207/301OHM-F-D	
R73	RL 0,35W 2,21KOHM+-1%TK50 RESISTOR	RL 082.2477	DRALORIC	SMA 0207/2,21K-F-C	
R75	RL 0,35W 10,0KOHM+-1%TK50 RESISTOR	RL 083.1297	DRALORIC	SMA0207/10K-F-D	
R76	RL 0,35W 825 OHM+-1%TK50 RESISTOR	RL 082.2502	DRALORIC	SMA 0207/825OHM-F-C	
R100	RL 0,35W 6,81KOHM+-1%TK50 RESISTOR	RL 082.2560	DRALORIC	SMA 0207/6,81K-F-C	
R101	RL 0,35W 100 OHM+-1%TK50 RESISTOR	RL 082.6543	DRALORIC	SMA0207/100/HM-F-D	
R102	RL 0,35W 3,32KOHM+-1%TK50 RESISTOR	RL 083.0990	DRALORIC	SMA0207/3,32K-F-D	
R103	RL 0,35W 3,32KOHM+-1%TK50 RESISTOR	RL 083.0990	DRALORIC	SMA0207/3,32K-F-D	
R104	RL 0,35W 3,32KOHM+-1%TK50 RESISTOR	RL 083.0990	DRALORIC	SMA0207/3,32K-F-D	
R110	RL 0,35W 100 OHM+-1%TK50 RESISTOR	RL 082.6543	DRALORIC	SMA0207/100/HM-F-D	
R111	RL 0,35W 3,32KOHM+-1%TK50 RESISTOR	RL 083.0990	DRALORIC	SMA0207/3,32K-F-D	
R112	RL 0,35W 150 OHM+-1%TK50 RESISTOR	RL 082.9942	DRALORIC	SMA0207/150OHM-F-D	
R113	RL 0,35W 150 OHM+-1%TK50 RESISTOR	RL 082.9942	DRALORIC	SMA0207/150OHM-F-D	
R120	RL 0,35W 3,32KOHM+-1%TK50 RESISTOR	RL 083.0990	DRALORIC	SMA0207/3,32K-F-D	
R122	RL 0,35W 221 KOHM+-1%TK50 RESISTOR	RL 083.2270	DRALORIC	SMA0207/221K-F-C	
R123	RS 0,5W200KOHM+-20%KURVE1 DEPOS.-CARBON POTENTIOMET	RS 069.0474	BOURNS	3329H-1-204	
R124	RL 0,35W 2,74KOHM+-1%TK50 RESISTOR	RL 083.0926	DRALORIC	SMA0207/2,74K-F-D	
R125	RS 0,3W 500 OHM+-10%CERM. TRIMMING POTENTIOMETER	RS 006.6675	BOURNS	3296W-1- 500OHM+-10%	
R126	RL 0,35W 1,50KOHM+-1%TK50 RESISTOR	RL 083.0732	DRALORIC	SMA0207/1,50K-F-D	
R130	RL 0,35W 6,81KOHM+-1%TK50 RESISTOR	RL 082.2560	DRALORIC	SMA 0207/6,81K-F-C	
R131	RL 0,35W15 OHM 1%TK50 RESISTOR	RL 082.9020	DRALORIC	SMA0207/150HM-F-D	
R132	RL 0,35W15 OHM 1%TK50 RESISTOR	RL 082.9020	DRALORIC	SMA0207/150HM-F-D	
R133	RL 0,35W 6,81KOHM+-1%TK50 RESISTOR	RL 082.2560	DRALORIC	SMA 0207/6,81K-F-C	
R140	RL 0,35W 100 OHM+-1%TK50 RESISTOR	RL 082.6543	DRALORIC	SMA0207/100/HM-F-D	
R141	RL 0,35W 221 OHM+-1%TK50 RESISTOR	RL 083.0084	DRALORIC	SMA0207/221OHM-F-D	
R142	RL 0,35W 100 OHM+-1%TK50 RESISTOR	RL 082.6543	DRALORIC	SMA0207/100/HM-F-D	
R143	RS 0,5W 200 OHM+-20%KURV1 DEPOS.-CARBON POTENTIOMET	RS 069.8017	BOURNS	3329H-1-201	
R144	RL 0,35W 100 OHM+-1%TK50 RESISTOR	RL 082.6543	DRALORIC	SMA0207/100/HM-F-D	
R145	RL 0,35W 1,82KOHM+-1%TK50 RESISTOR	RL 082.2277	DRALORIC	SMA0207/1,82K-F-C	
R146	RL 0,35W 221 OHM+-1%TK50 RESISTOR	RL 083.0084	DRALORIC	SMA0207/221OHM-F-D	
R147	RL 0,35W 3,32KOHM+-1%TK50 RESISTOR	RL 083.0990	DRALORIC	SMA0207/3,32K-F-D	
R150	RL 0,35W 100 OHM+-1%TK50 RESISTOR	RL 082.6543	DRALORIC	SMA0207/100/HM-F-D	
R151	RL 0,35W 2,21KOHM+-1%TK50 RESISTOR	RL 082.2477	DRALORIC	SMA 0207/2,21K-F-C	
R152	RL 0,35W 2,21KOHM+-1%TK50 RESISTOR	RL 082.2477	DRALORIC	SMA 0207/2,21K-F-C	
R153	RL 0,35W 392 OHM+-1%TK50 RESISTOR	RL 082.2183	DRALORIC	SMA0207/392K-F-C	
R154	RL 0,35W 274 OHM+-1%TK50 RESISTOR	RL 083.0178	DRALORIC	SMA0207/274OHM-F-D	

Kennz. Comp.No.	Benennung Designation	Sachnummer Stock No.	Hersteller Manufacturer	Bezeichnung Designation	enthalten in contained in
R155	RL 0,35W 274 OHM+-1%TK50 RESISTOR	RL 083.0178	DRALORIC	SMA0207/274OHM-F-D	
R156	RL 0,35W 33,2 OHM+-1%TK50 RESISTOR	RL 082.9359	DRALORIC	SMA0207/33,2OHM-F-D	
R160	RL 0,35W 332 OHM+-1%TK50 RESISTOR	RL 083.0255	DRALORIC	SMA0207/332OHM-F-D	
R161	RL 0,35W 1,82KOHM+-1%TK50 RESISTOR	RL 082.2277	DRALORIC	SMA0207/1,82K-F-C	
R164	RL 0,35W 1KOHM+-1%TK50 RESISTOR	RL 082.2160	DRALORIC	SMA0207/1K-F-C	
R165	RL 0,35W 1KOHM+-1%TK50 RESISTOR	RL 082.2160	DRALORIC	SMA0207/1K-F-C	
R170	RL 0,35W 100 OHM+-1%TK50 RESISTOR	RL 082.6543	DRALORIC	SMA0207/100/HM-F-D	
R171	RL 0,35W 221 OHM+-1%TK50 RESISTOR	RL 083.0084	DRALORIC	SMA0207/221OHM-F-D	
R172	RL 0,35W 100 OHM+-1%TK50 RESISTOR	RL 082.6543	DRALORIC	SMA0207/100/HM-F-D	
R173	RL 0,35W 1,82KOHM+-1%TK50 RESISTOR	RL 082.2277	DRALORIC	SMA0207/1,82K-F-C	
R174	RL 0,35W 100 OHM+-1%TK50 RESISTOR	RL 082.6543	DRALORIC	SMA0207/100/HM-F-D	
R175	RS 0,5W 200 OHM+-20%KURV1 DEPOS.-CARBON POTENTIOMET	RS 069.8017	BOURNS	3329H-1-201	
R176	RL 0,35W 221 OHM+-1%TK50 RESISTOR	RL 083.0084	DRALORIC	SMA0207/221OHM-F-D	
R177	RL 0,35W 3,32KOHM+-1%TK50 RESISTOR	RL 083.0990	DRALORIC	SMA0207/3,32K-F-D	
R178	RL 0,35W 2,21KOHM+-1%TK50 RESISTOR	RL 082.2477	DRALORIC	SMA 0207/2,21K-F-C	
R179	RL 0,35W 2,21KOHM+-1%TK50 RESISTOR	RL 082.2477	DRALORIC	SMA 0207/2,21K-F-C	
R180	RL 0,35W 392 OHM+-1%TK50 RESISTOR	RL 082.2183	DRALORIC	SMA0207/392K-F-C	
R181	RL 0,35W 274 OHM+-1%TK50 RESISTOR	RL 083.0178	DRALORIC	SMA0207/274OHM-F-D	
R182	RL 0,35W 274 OHM+-1%TK50 RESISTOR	RL 083.0178	DRALORIC	SMA0207/274OHM-F-D	
R183	RL 0,35W 100 OHM+-1%TK50 RESISTOR	RL 082.6543	DRALORIC	SMA0207/100/HM-F-D	
R184	RL 0,35W 33,2 OHM+-1%TK50 RESISTOR	RL 082.9359	DRALORIC	SMA0207/33,2OHM-F-D	
R185	RL 0,35W 332 OHM+-1%TK50 RESISTOR	RL 083.0255	DRALORIC	SMA0207/332OHM-F-D	
R186	RL 0,35W 1,82KOHM+-1%TK50 RESISTOR	RL 082.2277	DRALORIC	SMA0207/1,82K-F-C	
R188	RL 0,35W 5,62KOHM+-1%TK50 RESISTOR	RL 082.2190	DRALORIC	SMA0207/5,62K-F-C	
R189	RL 0,35W 10,0KOHM+-1%TK50 RESISTOR	RL 083.1297	DRALORIC	SMA0207/10K-F-D	
R190	RL 0,35W 274 OHM+-1%TK50 RESISTOR	RL 083.0178	DRALORIC	SMA0207/274OHM-F-D	
R191	RL 0,35W 274 OHM+-1%TK50 RESISTOR	RL 083.0178	DRALORIC	SMA0207/274OHM-F-D	
R192	RL 0,35W 274 OHM+-1%TK50 RESISTOR	RL 083.0178	DRALORIC	SMA0207/274OHM-F-D	
R193	RL 0,35W 10,0KOHM+-1%TK50 RESISTOR	RL 083.1297	DRALORIC	SMA0207/10K-F-D	
R194	RL 0,35W 274 OHM+-1%TK50 RESISTOR	RL 083.0178	DRALORIC	SMA0207/274OHM-F-D	
R200	RL 0,35W 82,5 OHM+-1%TK50 RESISTOR	RL 082.9707	DRALORIC	SMA0207/82,5OHM-F-D	
R201	RL 0,35W 3,32KOHM+-1%TK50 RESISTOR	RL 083.0990	DRALORIC	SMA0207/3,32K-F-D	
R202	RL 0,35W 221 OHM+-1%TK50 RESISTOR	RL 083.0084	DRALORIC	SMA0207/221OHM-F-D	
R203	RL 0,35W 100 OHM+-1%TK50 RESISTOR	RL 082.6543	DRALORIC	SMA0207/100/HM-F-D	
R204	RL 0,35W 1,82KOHM+-1%TK50 RESISTOR	RL 082.2277	DRALORIC	SMA0207/1,82K-F-C	
R205	RL 0,35W 100 OHM+-1%TK50 RESISTOR	RL 082.6543	DRALORIC	SMA0207/100/HM-F-D	
R206	RL 0,35W 221 OHM+-1%TK50 RESISTOR	RL 083.0084	DRALORIC	SMA0207/221OHM-F-D	
R207	RS 0,5W 200 OHM+-20%KURV1 DEPOS.-CARBON POTENTIOMET	RS 069.8017	BOURNS	3329H-1-201	
R208	RL 0,35W 392 OHM+-1%TK50 RESISTOR	RL 082.2183	DRALORIC	SMA0207/392K-F-C	

Für diese Unterlage behalten wir uns alle Rechte vor

Kennz. Comp.No.	Benennung Designation	Sachnummer Stock No.	Hersteller Manufacturer	Bezeichnung Designation	enthalten in contained in
R210	RL 0,35W 2,21KOHM+-1%TK50 RESISTOR	RL 082.2477	DRALORIC	SMA 0207/2,21K-F-C	
R211	RL 0,35W 2,21KOHM+-1%TK50 RESISTOR	RL 082.2477	DRALORIC	SMA 0207/2,21K-F-C	
R212	RL 0,35W 392 OHM+-1%TK50 RESISTOR	RL 082.2183	DRALORIC	SMA0207/392K-F-C	
R213	RL 0,35W 274 OHM+-1%TK50 RESISTOR	RL 083.0178	DRALORIC	SMA0207/2740HM-F-D	
R214	RL 0,35W 274 OHM+-1%TK50 RESISTOR	RL 083.0178	DRALORIC	SMA0207/2740HM-F-D	
R215	RL 0,35W5,62 OHM+-1% TK50 METALFILMRESISTOR	RL 099.8044	RESISTA	MK2 5,62 OHM 1% TK50	
R216	RL 0,35W 392 OHM+-1%TK50 RESISTOR	RL 082.2183	DRALORIC	SMA0207/392K-F-C	
R217	RL 0,35W 3,32KOHM+-1%TK50 RESISTOR	RL 083.0990	DRALORIC	SMA0207/3,32K-F-D	
R221	RL 0,35W 4,75KOHM+-1%TK50 RESISTOR	RL 083.1097	DRALORIC	SMA0207/4,75K-F-D	
R222	RL 0,35W 681 OHM+-1%TK50 RESISTOR	RL 083.0490	DRALORIC	SMA0207/6810HM-F-D	
R223	RL 0,35W 681 OHM+-1%TK50 RESISTOR	RL 083.0490	DRALORIC	SMA0207/6810HM-F-D	
R224	RL 0,35W 681 OHM+-1%TK50 RESISTOR	RL 083.0490	DRALORIC	SMA0207/6810HM-F-D	
R225	RL 0,35W 1KOHM+-1%TK50 RESISTOR	RL 082.2160	DRALORIC	SMA0207/1K-F-C	
R226	RL 0,35W 4,75KOHM+-1%TK50 RESISTOR	RL 083.1097	DRALORIC	SMA0207/4,75K-F-D	
R230	RL 0,35W 6,81KOHM+-1%TK50 RESISTOR	RL 082.2560	DRALORIC	SMA 0207/6,81K-F-C	
R231	RL 0,35W 100 OHM+-1%TK50 RESISTOR	RL 082.6543	DRALORIC	SMA0207/100/HM-F-D	
R232	RL 0,35W 3,32KOHM+-1%TK50 RESISTOR	RL 083.0990	DRALORIC	SMA0207/3,32K-F-D	
R233	RL 0,35W 750 OHM+-1%TK50 RESISTOR	RL 082.2360	DRALORIC	SMA0207/7500HM-F-C	
R234	RL 0,35W 750 OHM+-1%TK50 RESISTOR	RL 082.2360	DRALORIC	SMA0207/7500HM-F-C	
R235	RL 0,35W 1KOHM+-1%TK50 RESISTOR	RL 082.2160	DRALORIC	SMA0207/1K-F-C	
R237	RL 0,35W 150 OHM+-1%TK50 RESISTOR	RL 082.9942	DRALORIC	SMA0207/1500HM-F-D	
R238	RL 0,35W 2,21KOHM+-1%TK50 RESISTOR	RL 082.2477	DRALORIC	SMA 0207/2,21K-F-C	
R243	RL 0,35W 10,0KOHM+-1%TK50 RESISTOR	RL 083.1297	DRALORIC	SMA0207/10K-F-D	
R244	RS 0,3W 500 OHM+-10%CERM. TRIMMING POTENTIOMETER	RS 006.6675	BOURNS	3296W-1- 500OHM+-10%	
R245	RL 0,35W 9,09KOHM+-1%TK50 RESISTOR	RL 082.2177	DRALORIC	SMA0207/9,09K-F-C	
R246	RL 0,35W 10,0KOHM+-1%TK50 RESISTOR	RL 083.1297	DRALORIC	SMA0207/10K-F-D	
R247	RL 0,35W 10,0KOHM+-1%TK50 RESISTOR	RL 083.1297	DRALORIC	SMA0207/10K-F-D	
R248	RL 0,35W 4,32KOHM+-1%TK50 RESISTOR	RL 082.6572	DRALORIC	SMA0207/4,32K-F-D	
R250	RN 7X2,2KOHM+-2%SIL 8 H5 RESISTOR NETWORK	RN 540.5666	BOURNS	4308R-101-222	
R251	RN 5X2,2KOHM+-2% SIL6 H5 RESISTOR NETWORK	RN 504.0174	BOURNS	4306R-101-222	
R252	RL 0,35W 10,0KOHM+-1%TK50 RESISTOR	RL 083.1297	DRALORIC	SMA0207/10K-F-D	
R254	RL 0,35W 10,0KOHM+-1%TK50 RESISTOR	RL 083.1297	DRALORIC	SMA0207/10K-F-D	
R262	RL 0,35W 10,0KOHM+-1%TK50 RESISTOR	RL 083.1297	DRALORIC	SMA0207/10K-F-D	
R264	RL 0,35W 10,0KOHM+-1%TK50 RESISTOR	RL 083.1297	DRALORIC	SMA0207/10K-F-D	
R270	RN 9X 10KOHM+-SIL10 H5 RESISTOR NETWORK	RN 343.4523	BOURNS	4310R-101-103	
R271	RN 7X 10KOHM+-2%SIL 8 H5 RESISTOR NETWORK	RN 581.2184	BOURNS	4308R-101-103	
R272	RN 7X 10KOHM+-2%SIL 8 H5 RESISTOR NETWORK	RN 581.2184	BOURNS	4308R-101-103	
R290	RL 0,35W 10,0 OHM+-1%TK50 RESISTOR	RL 082.8852	DRALORIC	SMA0207/100HM-F-D	
R300	RL 0,35W 100 OHM+-1%TK50 RESISTOR	RL 082.6543	DRALORIC	SMA0207/100/HM-F-D	

Kennz. Comp.No.	Benennung Designation	Sachnummer Stock No.	Hersteller Manufacturer	Bezeichnung Designation	enthalten in contained in
R301	RL 0,35W 100 OHM+-1%TK50 RESISTOR	RL 082.6543	DRALORIC	SMA0207/100/HM-F-D	
R325	RL 0,35W 10,0KOHM+-1%TK50 RESISTOR	RL 083.1297	DRALORIC	SMA0207/10K-F-D	
R326	RL 0,35W 10,0KOHM+-1%TK50 RESISTOR	RL 083.1297	DRALORIC	SMA0207/10K-F-D	
R330	RL 0,35W 10,0KOHM+-1%TK50 RESISTOR	RL 083.1297	DRALORIC	SMA0207/10K-F-D	
R340	RL 0,35W 10,0KOHM+-1%TK50 RESISTOR	RL 083.1297	DRALORIC	SMA0207/10K-F-D	
R341	RL 0,35W 10,0KOHM+-1%TK50 RESISTOR	RL 083.1297	DRALORIC	SMA0207/10K-F-D	
R345	RL 0,35W 10,0KOHM+-1%TK50 RESISTOR	RL 083.1297	DRALORIC	SMA0207/10K-F-D	
R346	RL 0,35W 10,0KOHM+-1%TK50 RESISTOR	RL 083.1297	DRALORIC	SMA0207/10K-F-D	
R355	RL 0,35W 10,0KOHM+-1%TK50 RESISTOR	RL 083.1297	DRALORIC	SMA0207/10K-F-D	
R356	RL 0,35W 10,0KOHM+-1%TK50 RESISTOR	RL 083.1297	DRALORIC	SMA0207/10K-F-D	
R357	RL 0,21W 4,75KOHM+-1%TK50 RESISTOR	RL 092.1521	RESISTA	MK1 4K75 1% TK50	
R360	RL 0,35W 10,0KOHM+-1%TK50 RESISTOR	RL 083.1297	DRALORIC	SMA0207/10K-F-D	
R361 ..364	RL 0,35W 2,21KOHM+-1%TK50 RESISTOR	RL 082.2477	DRALORIC	SMA 0207/2,21K-F-C	
R365	RL 0,35W 332 KOHM+-1%TK50 RESISTOR	RL 083.2441	DRALORIC	SMA0207/332K-F-C	
R366	RL 0,35W 1KOHM+-1%TK50 RESISTOR	RL 082.2160	DRALORIC	SMA0207/1K-F-C	
R367	RL 0,35W 1KOHM+-1%TK50 RESISTOR	RL 082.2160	DRALORIC	SMA0207/1K-F-C	
R371	RL 0,35W 10,0KOHM+-1%TK50 RESISTOR	RL 083.1297	DRALORIC	SMA0207/10K-F-D	
R372	RL 0,35W 10,0KOHM+-1%TK50 RESISTOR	RL 083.1297	DRALORIC	SMA0207/10K-F-D	
R373	RL 0,35W 10,0KOHM+-1%TK50 RESISTOR	RL 083.1297	DRALORIC	SMA0207/10K-F-D	
R374	RL 0,35W 20,0KOHM+-1%TK50 RESISTOR	RL 083.1522	DRALORIC	SMA/207/20K-F-C	
R375	RL 0,35W 1KOHM+-1%TK50 RESISTOR	RL 082.2160	DRALORIC	SMA0207/1K-F-C	
R376	RL 0,35W 12,1KOHM+-1%TK50 RESISTOR	RL 083.1351	DRALORIC	SMA0207/12,1K-F-D	
R377	RL 0,35W 5,62KOHM+-1%TK50 RESISTOR	RL 082.2190	DRALORIC	SMA0207/5,62K-F-C	
R378	RL 0,35W 1KOHM+-1%TK50 RESISTOR	RL 082.2160	DRALORIC	SMA0207/1K-F-C	
R379	RL 0,35W 332 KOHM+-1%TK50 RESISTOR	RL 083.2441	DRALORIC	SMA0207/332K-F-C	
R380	RL 0,35W 1KOHM+-1%TK50 RESISTOR	RL 082.2160	DRALORIC	SMA0207/1K-F-C	
R384	RL 0,35W 10,0KOHM+-1%TK50 RESISTOR	RL 083.1297	DRALORIC	SMA0207/10K-F-D	
R385	RL 0,35W 4,75KOHM+-1%TK50 RESISTOR	RL 083.1097	DRALORIC	SMA0207/4,75K-F-D	
R386	RL 0,35W 5,62KOHM+-1%TK50 RESISTOR	RL 082.2190	DRALORIC	SMA0207/5,62K-F-C	
R387	RL 0,35W 68,1KOHM+-1%TK50 RESISTOR	RL 082.2602	DRALORIC	SMA 0207/68,1K-F-C	
R388	RL 0,35W 4,75KOHM+-1%TK50 RESISTOR	RL 083.1097	DRALORIC	SMA0207/4,75K-F-D	
R390	RL 0,35W 2,21KOHM+-1%TK50 RESISTOR	RL 082.2477	DRALORIC	SMA 0207/2,21K-F-C	
R391	RL 0,35W 4,75KOHM+-1%TK50 RESISTOR	RL 083.1097	DRALORIC	SMA0207/4,75K-F-D	
R392	RL 0,35W 4,75KOHM+-1%TK50 RESISTOR	RL 083.1097	DRALORIC	SMA0207/4,75K-F-D	
R394	RL 0,35W 2,21KOHM+-1%TK50 RESISTOR	RL 082.2477	DRALORIC	SMA 0207/2,21K-F-C	
R395	RL 0,35W 3,32KOHM+-1%TK50 RESISTOR	RL 083.0990	DRALORIC	SMA0207/3,32K-F-D	
R396	RL 0,35W 3,32KOHM+-1%TK50 RESISTOR	RL 083.0990	DRALORIC	SMA0207/3,32K-F-D	
R397	RL 0,35W 3,32KOHM+-1%TK50 RESISTOR	RL 083.0990	DRALORIC	SMA0207/3,32K-F-D	
R398	RL 0,35W 1,62KOHM+-1%TK50 RESISTOR	RL 083.0755	DRALORIC	SMA0207/1,62K-F-D	

Für diese Unterlage behalten wir uns alle Rechte vor

Kennz. Comp.No.	Benennung Designation	Sachnummer Stock No.	Hersteller Manufacturer	Bezeichnung Designation	enthalten in contained in
R399	RS 0,3W 500 OHM+-10%CERM. TRIMMING POTENTIOMETER	RS 006.6675	BOURNS	3296W-1- 500OHM+-10%	
R400	RL 0,35W 4,75KOHM+-1%TK50 RESISTOR	RL 083.1097	DRALORIC	SMAO207/4,75K-F-D	
R401	RL 0,35W 4,75KOHM+-1%TK50 RESISTOR	RL 083.1097	DRALORIC	SMAO207/4,75K-F-D	
R414	RL 0,35W 10,OKOHM+-1%TK50 RESISTOR	RL 083.1297	DRALORIC	SMAO207/10K-F-D	
R415	RL 0,35W 10,OKOHM+-1%TK50 RESISTOR	RL 083.1297	DRALORIC	SMAO207/10K-F-D	
R420	RL 0,35W 475 KOHM+-1%TK50 RESISTOR	RL 083.2593	DRALORIC	SMAO207/475K-F-C	
R421	RL 0,35W 1,82KOHM+-1%TK50 RESISTOR	RL 082.2277	DRALORIC	SMAO207/1,82K-F-C	
R423	RL 0,35W 100 OHM+-1%TK50 RESISTOR	RL 082.6543	DRALORIC	SMAO207/100/HM-F-D	
R424	RL 0,35W 2,21KOHM+-1%TK50 RESISTOR	RL 082.2477	DRALORIC	SMA 0207/2,21K-F-C	
R426	RL 0,35W 100 OHM+-1%TK50 RESISTOR	RL 082.6543	DRALORIC	SMAO207/100/HM-F-D	
R427	RL 0,35W 1,82KOHM+-1%TK50 RESISTOR	RL 082.2277	DRALORIC	SMAO207/1,82K-F-C	
R428	RL 0,35W 475 KOHM+-1%TK50 RESISTOR	RL 083.2593	DRALORIC	SMAO207/475K-F-C	
R429	RL 0,35W 2,21KOHM+-1%TK50 RESISTOR	RL 082.2477	DRALORIC	SMA 0207/2,21K-F-C	
R430	RL 0,35W 10,OKOHM+-1%TK50 RESISTOR	RL 083.1297	DRALORIC	SMAO207/10K-F-D	
R431	RL 0,35W 10,OKOHM+-1%TK50 RESISTOR	RL 083.1297	DRALORIC	SMAO207/10K-F-D	
R440	RL 0,35W 10,OKOHM+-1%TK50 RESISTOR	RL 083.1297	DRALORIC	SMAO207/10K-F-D	
R441	RL 0,35W 10,OKOHM+-1%TK50 RESISTOR	RL 083.1297	DRALORIC	SMAO207/10K-F-D	
R450	RL 0,35W 2,74KOHM+-1%TK50 RESISTOR	RL 083.0926	DRALORIC	SMAO207/2,74K-F-D	
R451	RL 0,35W 4,75KOHM+-1%TK50 RESISTOR	RL 083.1097	DRALORIC	SMAO207/4,75K-F-D	
R452	RL 0,35W 47,5KOHM+-1%TK50 RESISTOR	RL 083.1800	DRALORIC	SMA/207/47,5K-F-C	
R453	RL 0,35W 2,74KOHM+-1%TK50 RESISTOR	RL 083.0926	DRALORIC	SMAO207/2,74K-F-D	
R454	RL 0,35W 4,75KOHM+-1%TK50 RESISTOR	RL 083.1097	DRALORIC	SMAO207/4,75K-F-D	
R455	RL 0,35W 47,5KOHM+-1%TK50 RESISTOR	RL 083.1800	DRALORIC	SMA/207/47,5K-F-C	
R456	RL 0,35W 2,74KOHM+-1%TK50 RESISTOR	RL 083.0926	DRALORIC	SMAO207/2,74K-F-D	
R457	RL 0,35W 4,75KOHM+-1%TK50 RESISTOR	RL 083.1097	DRALORIC	SMAO207/4,75K-F-D	
R458	RL 0,35W 47,5KOHM+-1%TK50 RESISTOR	RL 083.1800	DRALORIC	SMA/207/47,5K-F-C	
R459	RL 0,35W 2,74KOHM+-1%TK50 RESISTOR	RL 083.0926	DRALORIC	SMAO207/2,74K-F-D	
R460	RL 0,35W 4,75KOHM+-1%TK50 RESISTOR	RL 083.1097	DRALORIC	SMAO207/4,75K-F-D	
R461	RL 0,35W 47,5KOHM+-1%TK50 RESISTOR	RL 083.1800	DRALORIC	SMA/207/47,5K-F-C	
R470	RL 0,35W 10,OKOHM+-1%TK50 RESISTOR	RL 083.1297	DRALORIC	SMAO207/10K-F-D	
R471	RL 0,35W 10,OKOHM+-1%TK50 RESISTOR	RL 083.1297	DRALORIC	SMAO207/10K-F-D	
V20	AE BAV45 35V PICOAMPDI LOW LEAKAGE DIODE	AE 252.5386	VALVO	BAV45	
V21	AE BAV45 35V PICOAMPDI LOW LEAKAGE DIODE	AE 252.5386	VALVO	BAV45	
V36	AE BAV45 35V PICOAMPDI LOW LEAKAGE DIODE	AE 252.5386	VALVO	BAV45	
V37	AE BAV45 35V PICOAMPDI LOW LEAKAGE DIODE	AE 252.5386	VALVO	BAV45	
V38	AK BCY79IX P 45V 200MA TRANSISTOR	AK 010.3777	VALVO	BCY79IX	
V44	AD 1N4448 75V OA15 UDI DIODE	AD 012.0700	TEXAS INST	1N4448 GEGURTET	
V45	AD 1N4448 75V OA15 UDI DIODE	AD 012.0700	TEXAS INST	1N4448 GEGURTET	

Kennz. Comp.No.	Benennung Designation	Sachnummer Stock No.	Hersteller Manufacturer	Bezeichnung Designation	enthalten in contained in
V46	AK 2N2369A N 15V 200MA TRANSISTOR	AK 010.4680	VALVO	2N2369A	
V48	AK 2N2907A P 60V 600MA TRANSISTOR	AK 010.3583	VALVO	2N2907A	
V80	AK BCY59IX N 45V 200MA TRANSISTOR	AK 010.5163	VALVO	BCY59IX	
V82	AK BCY59IX N 45V 200MA TRANSISTOR	AK 010.5163	VALVO	BCY59IX	
V84	AK BCY59IX N 45V 200MA TRANSISTOR	AK 010.5163	VALVO	BCY59IX	
V86	AK BCY59IX N 45V 200MA TRANSISTOR	AK 010.5163	VALVO	BCY59IX	
V88	AK BCY59IX N 45V 200MA TRANSISTOR	AK 010.5163	VALVO	BCY59IX	
V90	AK BCY59IX N 45V 200MA TRANSISTOR	AK 010.5163	VALVO	BCY59IX	
V92	AK BCY59IX N 45V 200MA TRANSISTOR	AK 010.5163	VALVO	BCY59IX	
V103	AE BAV45 35V PICOAMPDI LOW LEAKAGE DIODE	AE 252.5386	VALVO	BAV45	
V104	AE BAV45 35V PICOAMPDI LOW LEAKAGE DIODE	AE 252.5386	VALVO	BAV45	
V120	AE BAV45 35V PICOAMPDI LOW LEAKAGE DIODE	AE 252.5386	VALVO	BAV45	
V121	AE BAV45 35V PICOAMPDI LOW LEAKAGE DIODE	AE 252.5386	VALVO	BAV45	
V130	AK 2N2907A P 60V 600MA TRANSISTOR	AK 010.3583	VALVO	2N2907A	
V131	AD 1N4448 75V 0A15 UDI DIODE	AD 012.0700	TEXAS INST	1N4448 GEGURTET	
V132	AD 1N4448 75V 0A15 UDI DIODE	AD 012.0700	TEXAS INST	1N4448 GEGURTET	
V133	AK 2N2369A N 15V 200MA TRANSISTOR	AK 010.4680	VALVO	2N2369A	
V140	AK CA3127E 5XN TR.ARRAY TRANSISTOR ARRAY	377.3836	RCA	CA3127E	
V141	AK BCY79IX P 45V 200MA TRANSISTOR	AK 010.3777	VALVO	BCY79IX	
V149	AE BAV45 35V PICOAMPDI LOW LEAKAGE DIODE	AE 252.5386	VALVO	BAV45	
V150	AK BCY79IX P 45V 200MA TRANSISTOR	AK 010.3777	VALVO	BCY79IX	
V151	AE 5082-2800 SCHOTTKY DIODE	AE 012.9066	HEWLETT-P.	5082-2800	
V152	AD 1N4448 75V 0A15 UDI DIODE	AD 012.0700	TEXAS INST	1N4448 GEGURTET	
V153	AE 5082-2800 SCHOTTKY DIODE	AE 012.9066	HEWLETT-P.	5082-2800	
V160	AM BF245B N-D 30V JFET FET	AM 010.8627	VALVO	BF245B	
V161	AK 2N2369A N 15V 200MA TRANSISTOR	AK 010.4680	VALVO	2N2369A	
V162	AK BCY59IX N 45V 200MA TRANSISTOR	AK 010.5163	VALVO	BCY59IX	
V163	AD 1N4448 75V 0A15 UDI DIODE	AD 012.0700	TEXAS INST	1N4448 GEGURTET	
V164	AD 1N4448 75V 0A15 UDI DIODE	AD 012.0700	TEXAS INST	1N4448 GEGURTET	
V165	AK BCY79IX P 45V 200MA TRANSISTOR	AK 010.3777	VALVO	BCY79IX	
V170	AK CA3127E 5XN TR.ARRAY TRANSISTOR ARRAY	377.3836	RCA	CA3127E	
V171	AK BCY79IX P 45V 200MA TRANSISTOR	AK 010.3777	VALVO	BCY79IX	
V172	AK BCY79IX P 45V 200MA TRANSISTOR	AK 010.3777	VALVO	BCY79IX	
V173	AE 5082-2800 SCHOTTKY DIODE	AE 012.9066	HEWLETT-P.	5082-2800	
V174	AE BAV45 35V PICOAMPDI LOW LEAKAGE DIODE	AE 252.5386	VALVO	BAV45	
V183	AD 1N4448 75V 0A15 UDI DIODE	AD 012.0700	TEXAS INST	1N4448 GEGURTET	
V184	AM BF245B N-D 30V JFET FET	AM 010.8627	VALVO	BF245B	
V185	AK 2N2369A N 15V 200MA TRANSISTOR	AK 010.4680	VALVO	2N2369A	
V186	AE 5082-2800 SCHOTTKY DIODE	AE 012.9066	HEWLETT-P.	5082-2800	

Für diese Unterlage behalten wir uns alle Rechte vor

Kennz. Comp.No.	Benennung Designation	Sachnummer Stock No.	Hersteller Manufacturer	Bezeichnung Designation	enthalten in contained in
V187	AK BCY79IX P 45V 200MA TRANSISTOR	AK 010.3777	VALVO	BCY79IX	
V190	AD 1N4448 75V 0A15 UDI DIODE	AD 012.0700	TEXAS INST	1N4448 GEGURTET	
V191	AD 1N4448 75V 0A15 UDI DIODE	AD 012.0700	TEXAS INST	1N4448 GEGURTET	
V192	AD 1N4448 75V 0A15 UDI DIODE	AD 012.0700	TEXAS INST	1N4448 GEGURTET	
V194	AD 1N4448 75V 0A15 UDI DIODE	AD 012.0700	TEXAS INST	1N4448 GEGURTET	
V200	AK CA3127E 5XN TR.ARRAY TRANSISTOR ARRAY	377.3836	RCA	CA3127E	
V201	AK BCY79IX P 45V 200MA TRANSISTOR	AK 010.3777	VALVO	BCY79IX	
V202	AK BCY79IX P 45V 200MA TRANSISTOR	AK 010.3777	VALVO	BCY79IX	
V203	AE 5082-2800 SCHOTTKY DIODE	AE 012.9066	HEWLETT-P.	5082-2800	
V204	AE 5082-2800 SCHOTTKY DIODE	AE 012.9066	HEWLETT-P.	5082-2800	
V215	AM BF245B N-D 30V JFET FET	AM 010.8627	VALVO	BF245B	
V216	AK 2N2369A N 15V 200MA TRANSISTOR	AK 010.4680	VALVO	2N2369A	
V217	AD 1N4448 75V 0A15 UDI DIODE	AD 012.0700	TEXAS INST	1N4448 GEGURTET	
V218	AD 1N4448 75V 0A15 UDI DIODE	AD 012.0700	TEXAS INST	1N4448 GEGURTET	
V221	AK BFX48 P 30V 100MA TRANSISTOR	AK 010.3202	SGS	BFX48	
V222	AE 5082-2800 SCHOTTKY DIODE	AE 012.9066	HEWLETT-P.	5082-2800	
V224	AK BFX48 P 30V 100MA TRANSISTOR	AK 010.3202	SGS	BFX48	
V225	AE BZX79/5V6 0.5W ZDI ZENER DIODE	AE 012.2455	VALVO	BZX79/C5V6	
V226	AK 2N2369A N 15V 200MA TRANSISTOR	AK 010.4680	VALVO	2N2369A	
V233	AE 5082-2800 SCHOTTKY DIODE	AE 012.9066	HEWLETT-P.	5082-2800	
V234	AE 5082-2800 SCHOTTKY DIODE	AE 012.9066	HEWLETT-P.	5082-2800	
V300	AE BZX85/C4V7 1,3W ZDI ZENER DIODE	AE 092.8210	THOMSON	BZX85/C4V7	
V301	AE BZX85/C4V7 1,3W ZDI ZENER DIODE	AE 092.8210	THOMSON	BZX85/C4V7	
V355	AD 1N4448 75V 0A15 UDI DIODE	AD 012.0700	TEXAS INST	1N4448 GEGURTET	
V356	AD 1N4448 75V 0A15 UDI DIODE	AD 012.0700	TEXAS INST	1N4448 GEGURTET	
V361	AD 1N4448 75V 0A15 UDI DIODE	AD 012.0700	TEXAS INST	1N4448 GEGURTET	
V362	AD 1N4448 75V 0A15 UDI DIODE	AD 012.0700	TEXAS INST	1N4448 GEGURTET	
V365	AD 1N4448 75V 0A15 UDI DIODE	AD 012.0700	TEXAS INST	1N4448 GEGURTET	
V384	AE BZX79/C4V7 0,5W ZDI ZENER.DIODE	AE 012.2432	AEG	BZX55/C4V7 GEG.	
V385	AK BCY59IX N 45V 200MA TRANSISTOR	AK 010.5163	VALVO	BCY59IX	
V386	AK BCY59IX N 45V 200MA TRANSISTOR	AK 010.5163	VALVO	BCY59IX	
V387	AD 1N4448 75V 0A15 UDI DIODE	AD 012.0700	TEXAS INST	1N4448 GEGURTET	
X16	FJ EINBAUSTECKER SYST.SMC CONNECTOR SMC	FJ 070.0151	RADIALL	112554	
X21	FP STECKERLEISTE 96POL. MALE MULTIPOINT CONNECTOR	FP 272.9187	PANDUIT	100-096-033/999	
X130	FP INDIREKT.STECKERL.36P. PIN CONNECTOR	FP 242.3600	BINDER	742-5-11-0178-00-36	
X131	FP KURZSCHL.BUCHSE OFFEN SHORTING PLUG	FP 342.1895	BERG	76264-101	
X160	FP INDIREKT.STECKERL.36P. PIN CONNECTOR	FP 242.3600	BINDER	742-5-11-0178-00-36	
X161	FP KURZSCHL.BUCHSE OFFEN SHORTING PLUG	FP 342.1895	BERG	76264-101	

Kennz. Comp.No.	Benennung Designation	Sachnummer Stock No.	Hersteller Manufacturer	Bezeichnung Designation	enthalten in contained in
X170	FP INDIREKT.STECKERL.36P. PIN CONNECTOR	FP 242.3600	BINDER	742-5-11-0178-00-36	
X171	FP KURZSCHL.BUCHSE OFFEN SHORTING PLUG	FP 342.1895	BERG	76264-101	
X200	FP INDIREKT.STECKERL.36P. PIN CONNECTOR	FP 242.3600	BINDER	742-5-11-0178-00-36	
X201	FP KURZSCHL.BUCHSE OFFEN SHORTING PLUG	FP 342.1895	BERG	76264-101	
X230	FP INDIREKT.STECKERL.36P. PIN CONNECTOR	FP 242.3600	BINDER	742-5-11-0178-00-36	
X231	FP KURZSCHL.BUCHSE OFFEN SHORTING PLUG	FP 342.1895	BERG	76264-101	
X280	FP INDIREKT.STECKERL.36P. PIN CONNECTOR	FP 242.3600	BINDER	742-5-11-0178-00-36	
X400	FP INDIREKT.STECKERL.36P. PIN CONNECTOR	FP 242.3600	BINDER	742-5-11-0178-00-36	
X415	FP INDIREKT.STECKERL.36P. PIN CONNECTOR	FP 242.3600	BINDER	742-5-11-0178-00-36	
X430	FP INDIREKT.STECKERL.36P. PIN CONNECTOR	FP 242.3600	BINDER	742-5-11-0178-00-36	
X450	FP INDIREKT.STECKERL.36P. PIN CONNECTOR	FP 242.3600	BINDER	742-5-11-0178-00-36	
X39A	FP INDIREKT.STECKERL.36P. PIN CONNECTOR	FP 242.3600	BINDER	742-5-11-0178-00-36	
X39B	FP INDIREKT.STECKERL.36P. PIN CONNECTOR	FP 242.3600	BINDER	742-5-11-0178-00-36	
X50A	FP INDIREKT.STECKERL.36P. PIN CONNECTOR	FP 242.3600	BINDER	742-5-11-0178-00-36	
X50B	FP INDIREKT.STECKERL.36P. PIN CONNECTOR	FP 242.3600	BINDER	742-5-11-0178-00-36	
X90A	FP INDIREKT.STECKERL.36P. PIN CONNECTOR	FP 242.3600	BINDER	742-5-11-0178-00-36	
X90B	FP INDIREKT.STECKERL.36P. PIN CONNECTOR	FP 242.3600	BINDER	742-5-11-0178-00-36	
					- ENDE -

Für diese Unterlage behalten wir uns alle Rechte vor

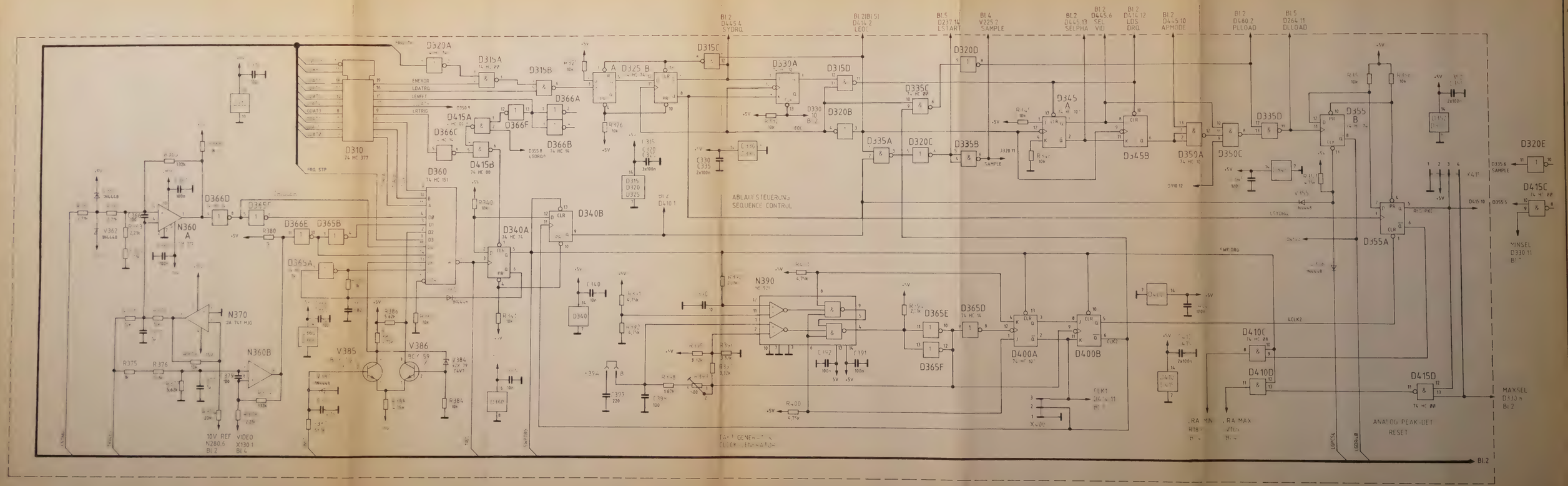

ROHDE&SCHWARZ

A/D-CONVERTER

805 1319 S

FSA

804 956 V

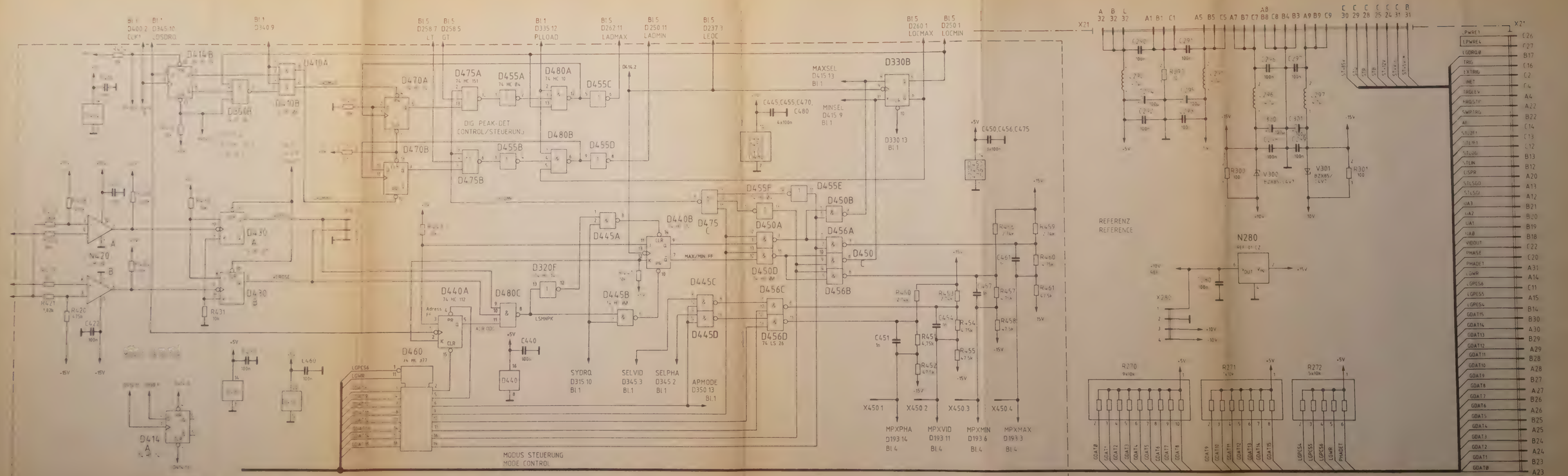

ROHDE&SCHWARZ	A		03.86	PF	E	37 065	01.89	Pa	1KGF	06.85	PF	A/D CONVERTER	805. 1319 S
	C		07.86	Hs	H		03.89	Pa					2
	D		12.86	Pf								FSA	804. 9516 V

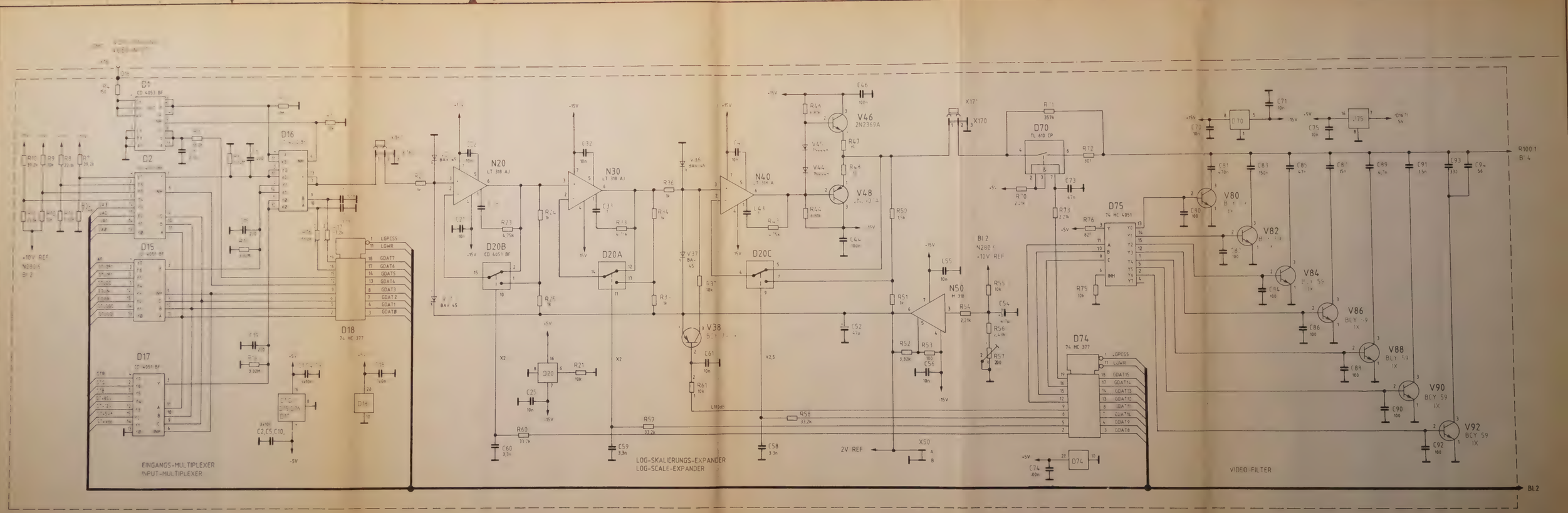

ROHDE&SCHWARZ	A		03.86	PF					IKGF	Tag	Name	Benennung: A/D CONVERTER	Zeichn. Nr. 805. 1319 S
	B		07.86	PF					Gearb.	03.86	PF		Blatt 3
	C					32 744 (106)	07.87	Bg	Gepr.				v. 5
			Datum	Name			Datum	Name	Norm.			Zu Gerät FSA	Reg.-Nr. 804 9516 V Erste Z.

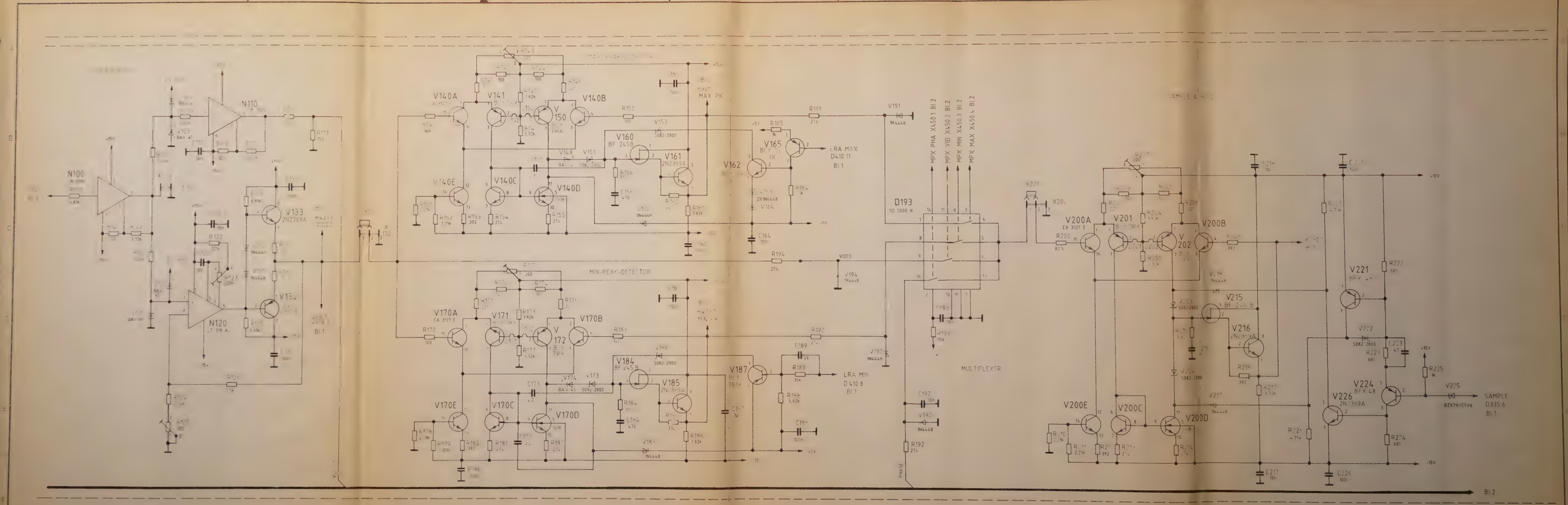

ROHDE&SCHWARZ	A		03.86	PF	D		12.86	PF	1KGF	Tag	Name
	B		07.86	PF	E		04.87	Pf	Bearb	06.85	PF
	C		11.86	Pf							

Benennung: A/D CONVERTER

Zeichn. Nr. 805. 1319 S

Zeichnung FSA

Reg. Nr. 804 9516 V

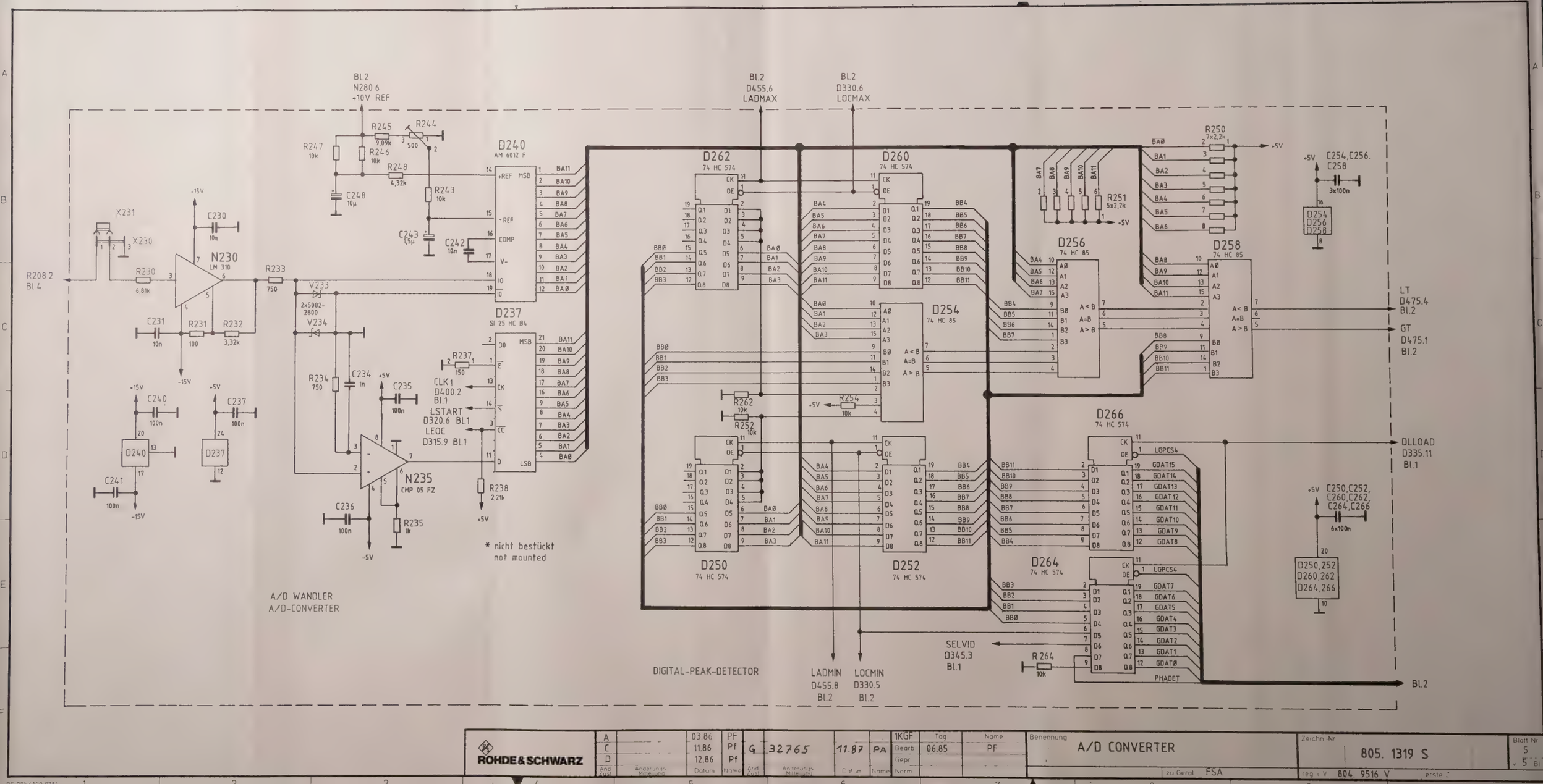

ROHDE&SCHWARZ	A		03.86	PF	G	32765	11.87	PA	1KGF	Tag	Name	Benennung	A/D CONVERTER
	C		11.86	Pf					Bearb	06.85	PF		
	D		12.86	Pf					Gepr			zu Gerät FSA	
	Änd Zust	Änderungs Mitteilung	Datum	Name	Änd Zust	Änderungs Mitteilung	Datum	Name	Norm				

Zeichn.-Nr 805. 1319 S

Blatt Nr 5 v 5 Bl

reg. i. V 804. 9516 V erste Z

Zeichn.-Nr 80[illegible]319 S Bl.5

Für diese Unterlage behalten wir uns alle Rechte vor

PF 095 4109 0781

Für diese Unterlage behalten wir uns alle Rechte vor.

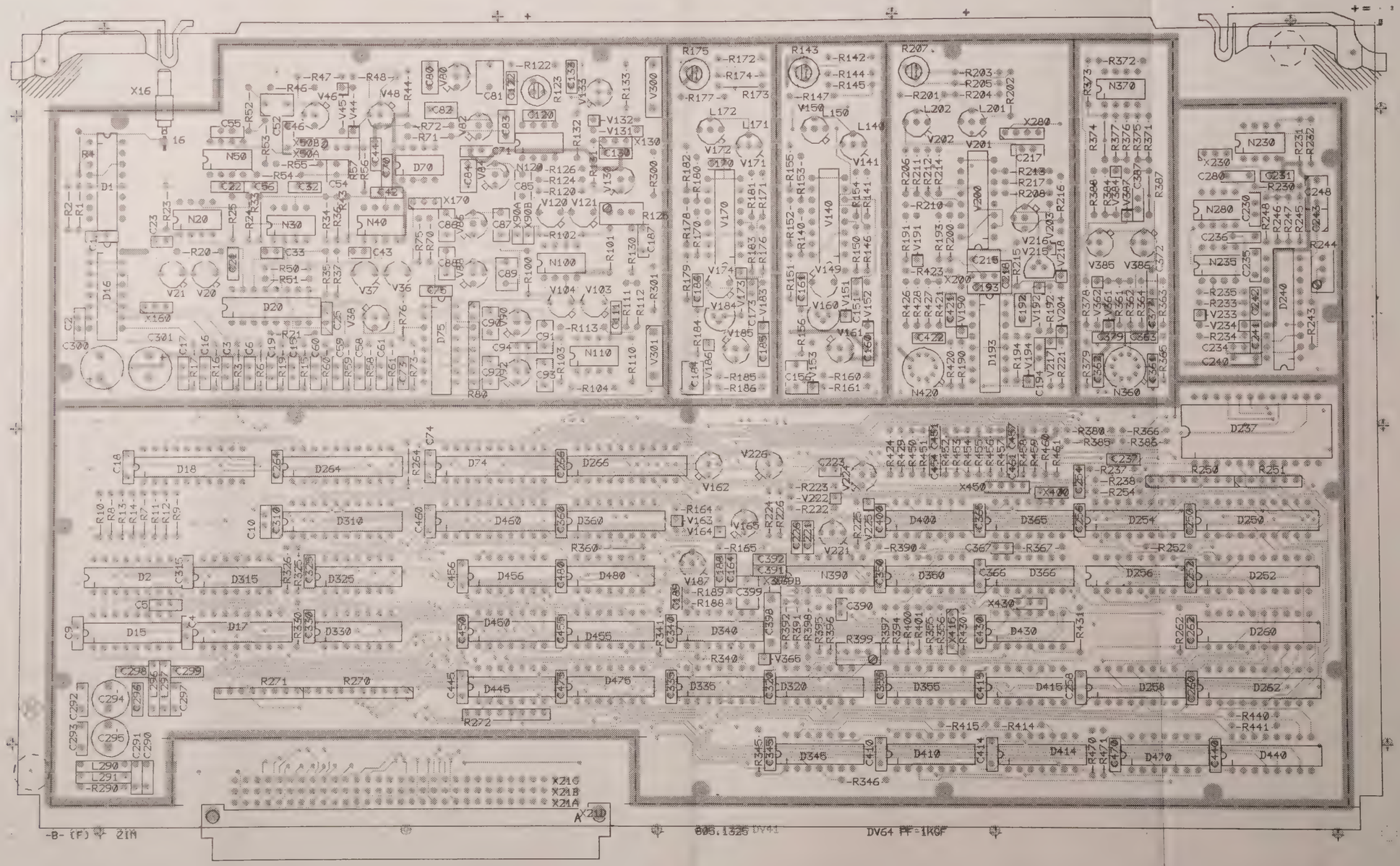

DV41

Ansicht und Leitungsführung Bauteilseite
View of tracks on component side

ACHTUNG EGB!
Elektrostatisch gefährdete Bauelemente erfordern eine besondere Handhabung.
ATTENTION ESD!
Electrostatic sensitive devices require a special handling
(hierzu HVC 250)

VARIANTENERKLÄRUNG/VERSION
VAR 02 – GRUNDAUSFÜHRUNG/BASIC MODEL

L		03.87	PF
Änd. Zust.	Änderungs-Mitteilung	Tag	Name

Maße ohne Toleranzangabe

1KGF	Tag	Name
Bearb.	03.87	PF
Gepr.		
Norm		

Maßstab 1 : 1

Halbzeug, Werkstoff

Benennung: A/D-CONVERTER | Z

ROHDE&SCHWARZ

zu Gerät FSA

Zeichn.-Nr. 805.1319.01 | EE

Blatt-Nr. 2 v. Bl.

reg. i. V 804.9516 V | erste Z. 804.9516

ISO-Projektion Methode E

PF 095.2493-0781

07.6001.81

Für diese Unterlage behalten wir uns alle Rechte vor.

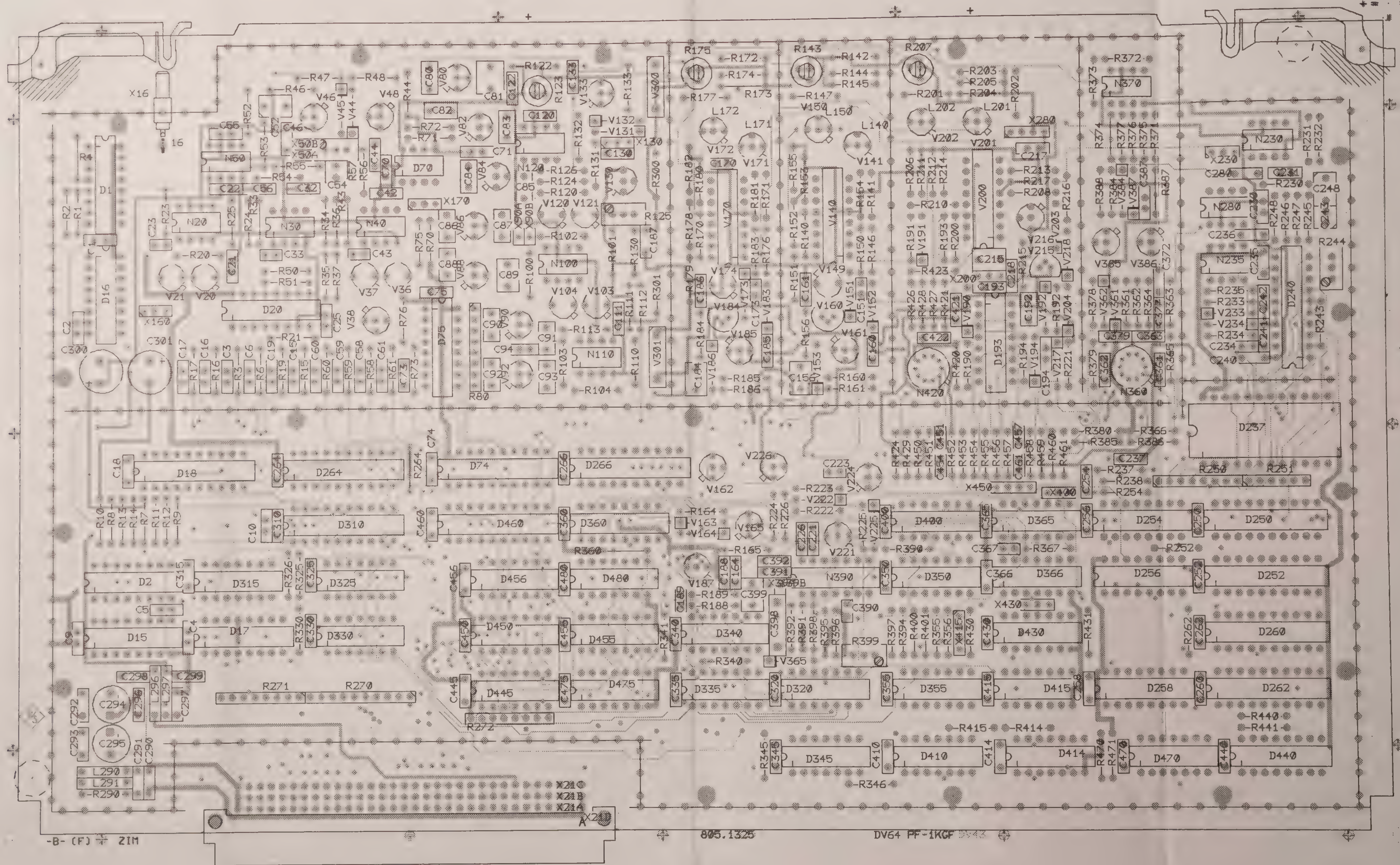

DV43

Ansicht und Leitungsführung Bauteilseite
View of tracks on component side

(hierzu HVC 250)

ACHTUNG: EGB!
Elektrostatisch gefährdete Bauelemente erfordern eine besondere Handhabung

ATTENTION ESD!
Electrostatic sensitive devices require a special handling.

VARIANTENERKLÄRUNG / VERSION
VAR 02 – GRUNDAUSFÜHRUNG / BASIC MODEL

Änd. Zust.	Änderungs-Mitteilung	Tag	Name
L		03.87	PF

Maße ohne Toleranzangabe

Maßstab 1 : 1

Halbzeug, Werkstoff

1KGF	Tag	Name
Bearb.	03.87	PF
Gepr.		
Norm		

Benennung: A/D-CONVERTER — Z

ROHDE&SCHWARZ

Zeichn.-Nr. 805.1319.01 EE

Blatt-Nr. 3 v. Bl.

zu Gerät FSA

reg. i. V. 804.9516 V — erste Z. 804.9516

ISO-Projektion Methode E

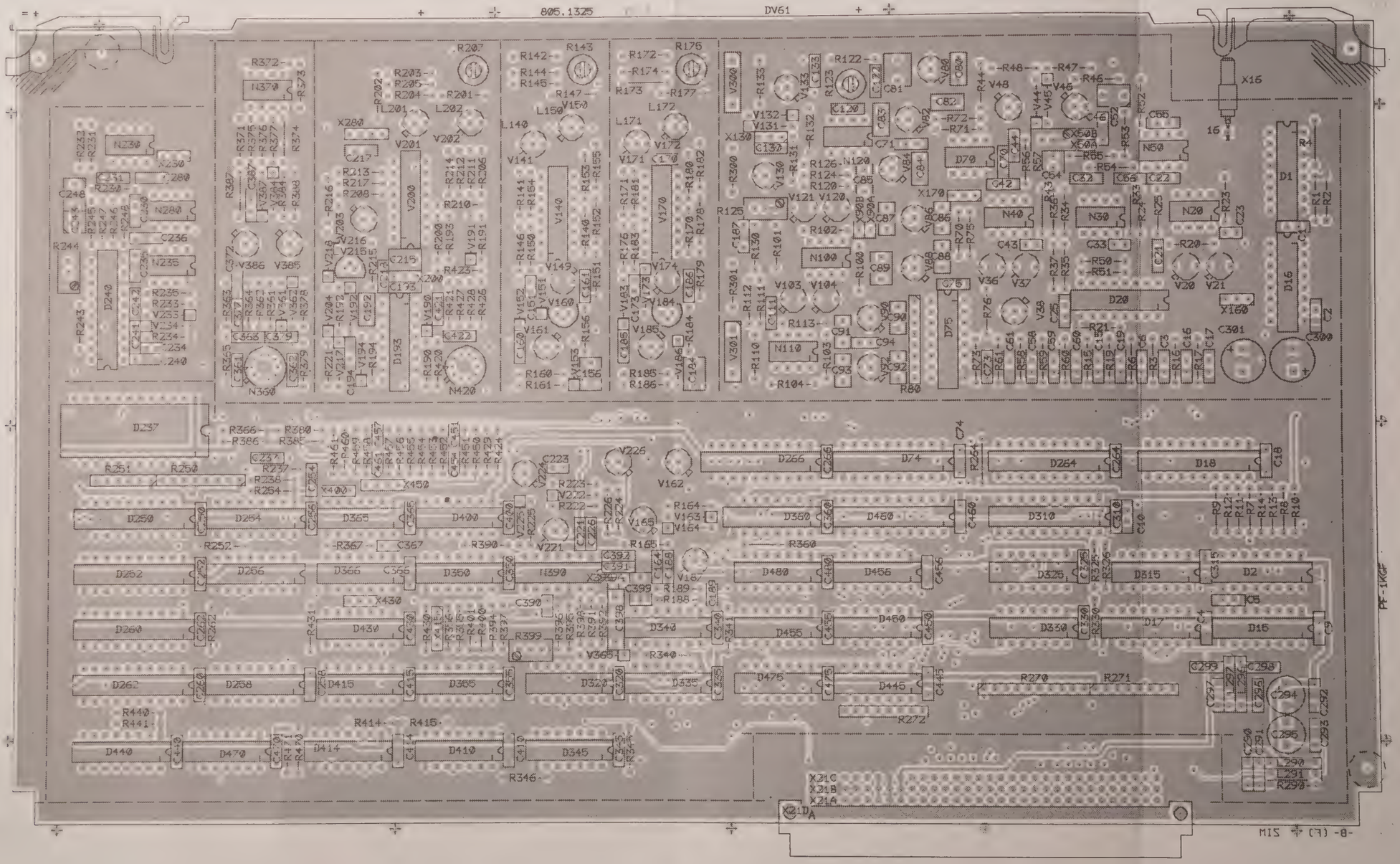

DV 13

Ansicht und Leitungsführung Lötseite
View of tracks on solder side

VARIANTENERKLÄRUNG / VERSION
VAR 02 – GRUNDAUSFÜHRUNG / BASIC MODEL

ACHTUNG: EGB!
Elektrostatisch gefährdete Bauelemente erfordern eine besondere Handhabung
ATTENTION ESD!
Electrostatic sensitive devices require a special handling

L		03.87	PF
And. Zust	Änderungs-Mitteilung	Tag	Name

Maße ohne Toleranzangabe

1KGF	Tag	Name
Bearb	03.87	PF
Gepr.		
Norm		

ROHDE&SCHWARZ
zu Gerät FSA

Maßstab 1 : 1
Halbzeug, Werkstoff
Benennung: A / D - CONVERTER | Z
Zeichn.-Nr. 805.1319.01 | EE | Blatt-Nr. 4 | v. Bl.
reg. i. V. 804.9516 V | erste Z. 804.9516

Für diese Unterlage behalten wir uns alle Rechte vor.

R388 lötseitig nach V362.2 bestückt

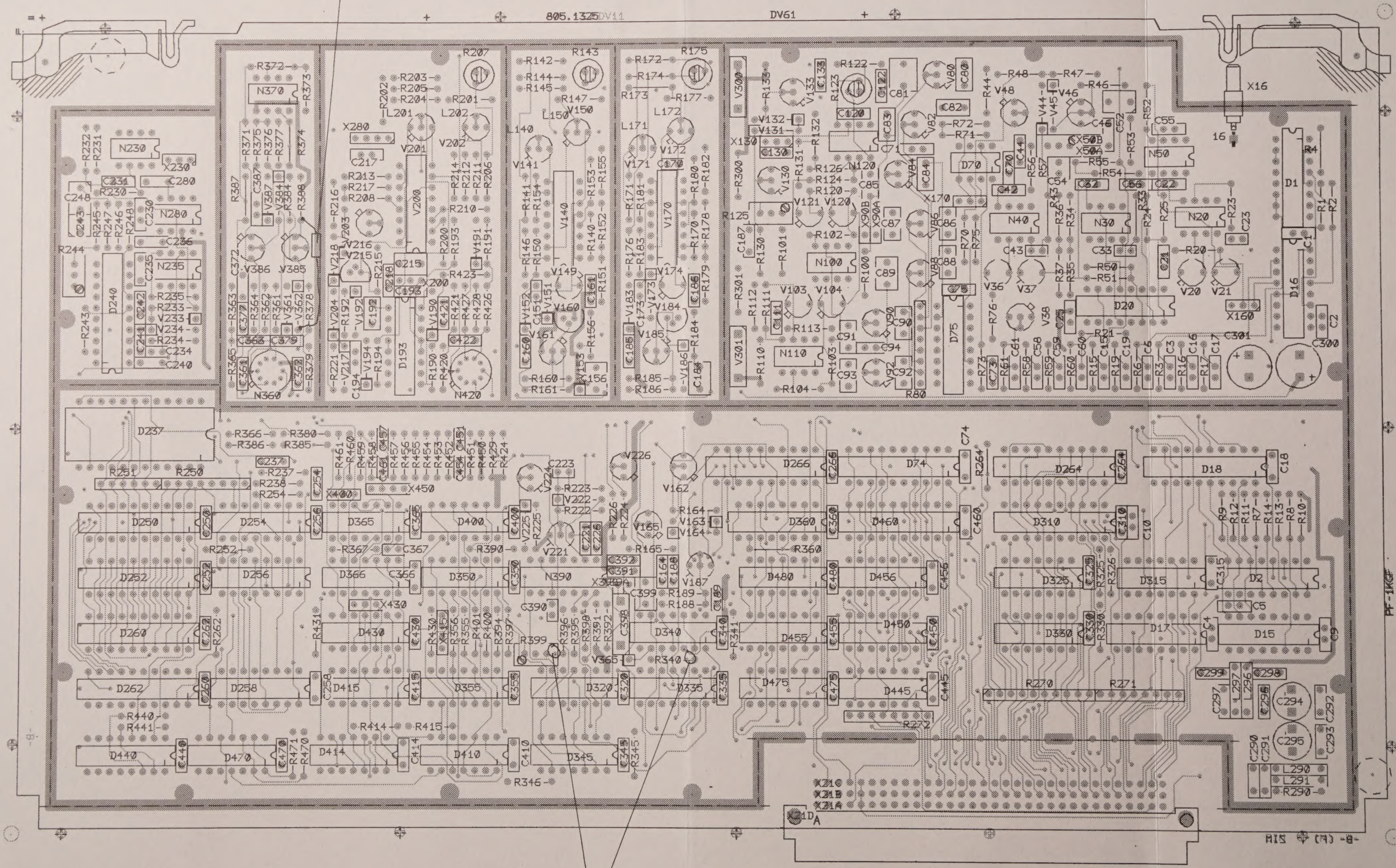

auf Zinnbrücken achten

DV 11

Ansicht und Leitungsführung Lötseite
View of tracks on solder side

ACHTUNG: EGB!
Elektrostatisch gefährdete Bauelemente erfordern eine besondere Handhabung.
ATTENTION ESD!
Electrostatic sensitive devices require a special handling.

(hierzu HVC 250)

VARIANTENERKLÄRUNG / VERSION
VAR 02 – GRUNDAUSFÜHRUNG / BASIC MODEL

Änd. Zust.	Änderungs-Mitteilung	Tag	Name
L		03.87	PF
M		04.87	Pf

Maße ohne Toleranzangabe

1KGF	Tag	Name
Bearb.	03.87	PF
Gepr.		
Norm		

Maßstab 1 : 1

Halbzeug, Werkstoff

Benennung: A / D - CONVERTER — Z

ROHDE & SCHWARZ

zu Gerät: FSA

Zeichn.-Nr. 805.1319.01 EE — Blatt-Nr. 5 v. Bl.

reg. i. V. 804.9516 V — erste Z. 804.9516